ITALIANA ferramenta

SYMETRA ONE



SYMETRA

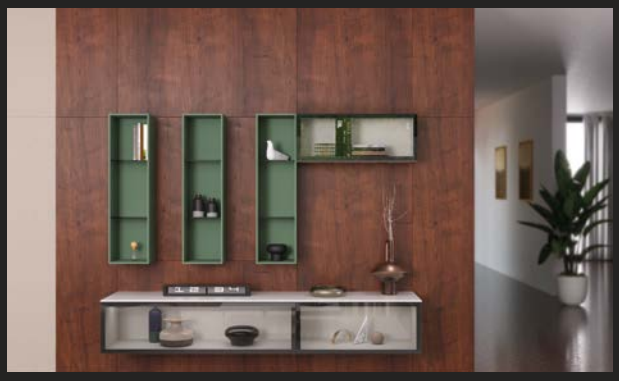

ITALIANA ferramenta

SYMETRA ONE

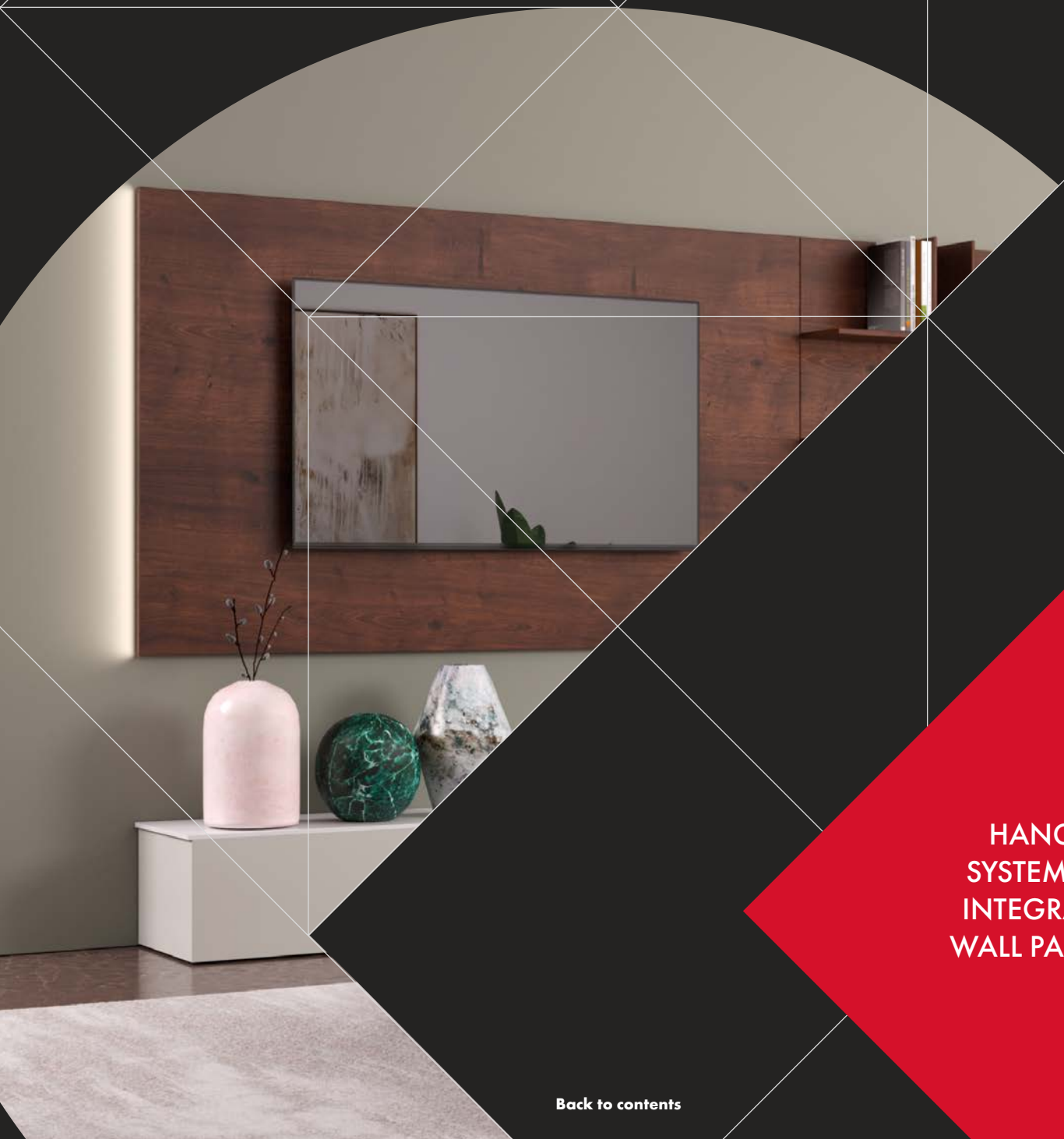

HANGING SYSTEM FOR INTEGRATED WALL PANELS

Back to contents

SYMETRA ONE







Back to contents

SYMETRA ONE

System suitable for furniture panels with shelves and small wall units with reduced depth, mounted directly on the panel. Ideal applications are small compositions such as entrance furniture or wall-mounted TV modules.

Innovative & Flexible

Freely plannable system for wall design with panels, shelves, wall cabinets, and ambient lighting.

Effortless Installation

Easily attach components to any furniture and structure them on any wall.

12 mm min.

40 kg per hanger

PATENT PENDING
Certificates available on request.

PANEL HANGING BRACKET AND ADJUSTABLE LEVELLER INSTALLATION ON THE PANEL

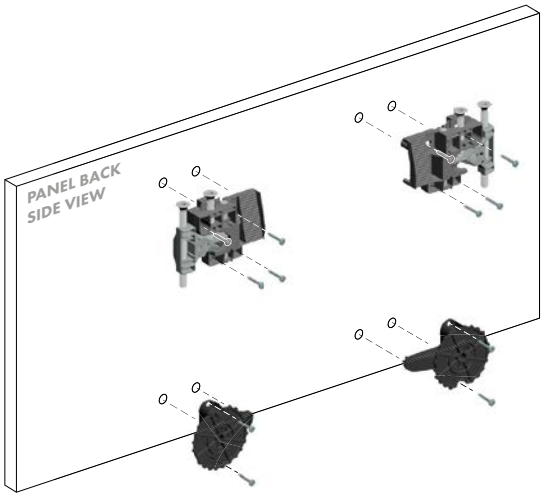

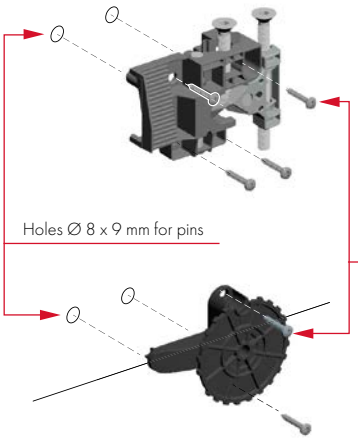

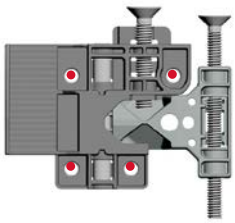

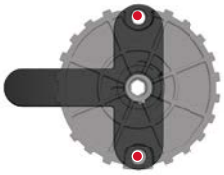

- Positions of pan head screws Ø 4 mm (view the related chart in the accessory section).

WALL BRACKETS FIXING TO THE WALL

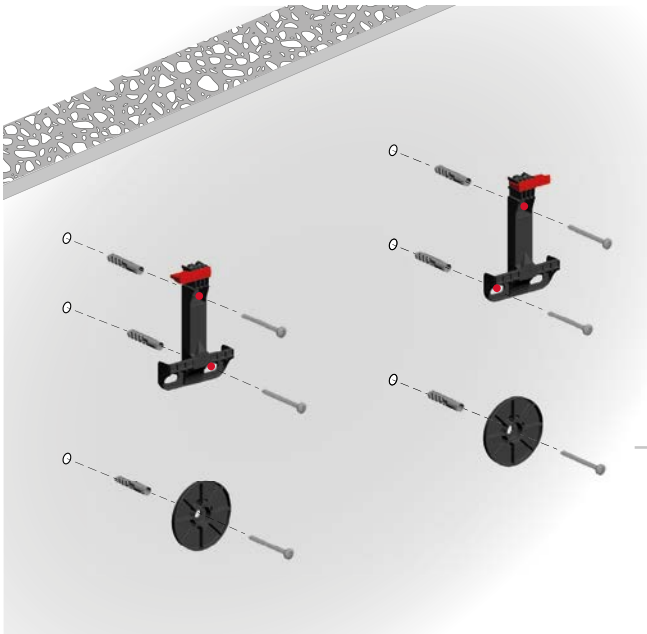

It is the responsibility of the customer:
- to ensure that the wall is of a suitable quality to hold the unit fixing in place.
- to use the proper hardware fittings according to the construction of the wall.

Fixing of wall brackets for panel hanging bracket

- Wall fixing screws positioning.

VERY IMPORTANT:
It is recommended to fix the wall bracket with the screws positioned on the same side of the panel hanging bracket.

First slide the anti-turnover device onto the wall bracket so that it does not interfere with the hanger.

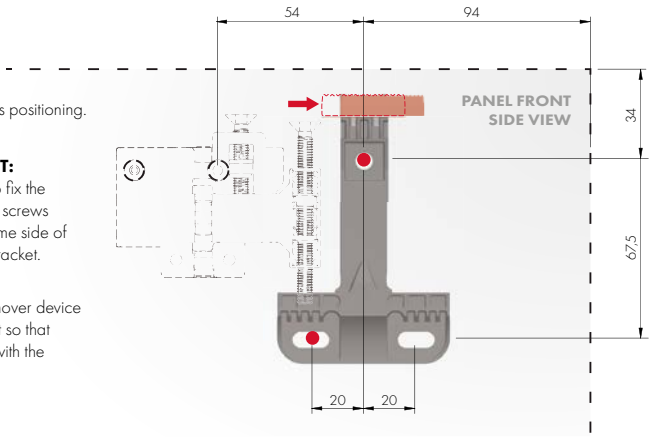

Fixing of wall supports for adjustable levellers

- Wall fixing screws positioning.

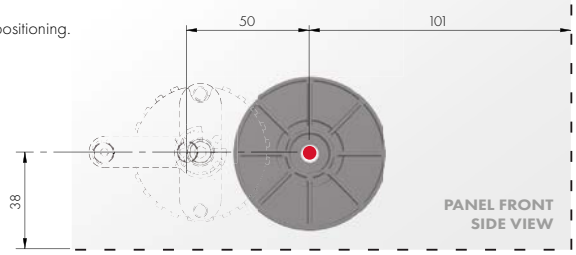

Back to contents

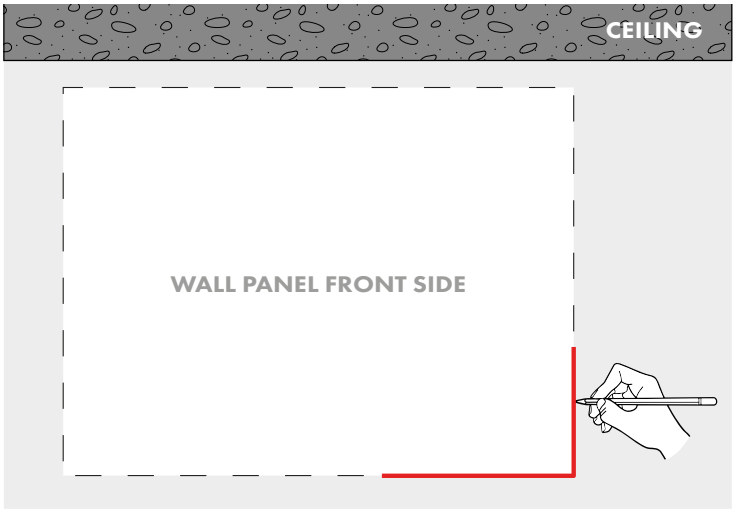

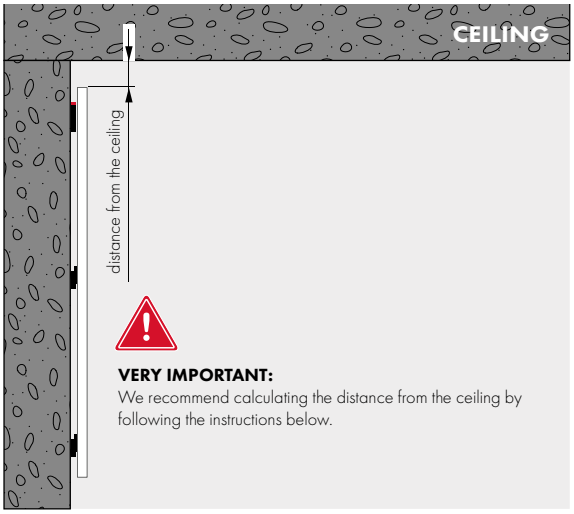

Minimum distance from the ceiling:
to allow installation of the panels.

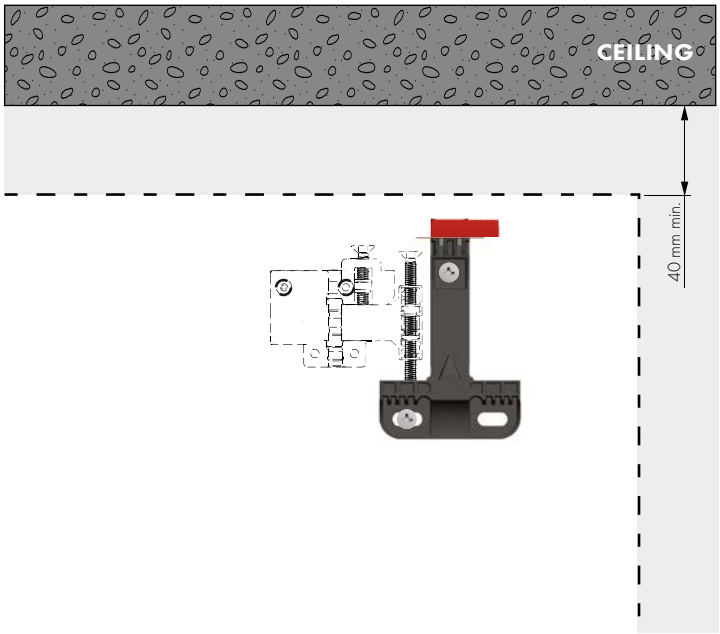

Minimum distance from the ceiling:
to allow easy adjustment of the hanging brackets with the panel installed.

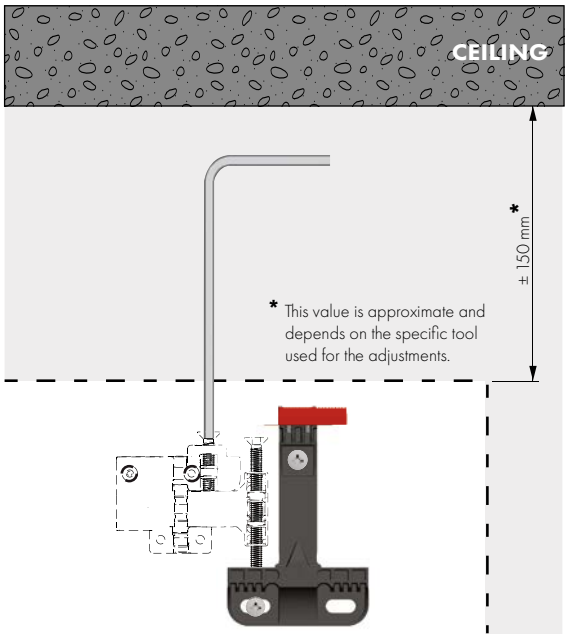

INSTALLATION ON THE WALL

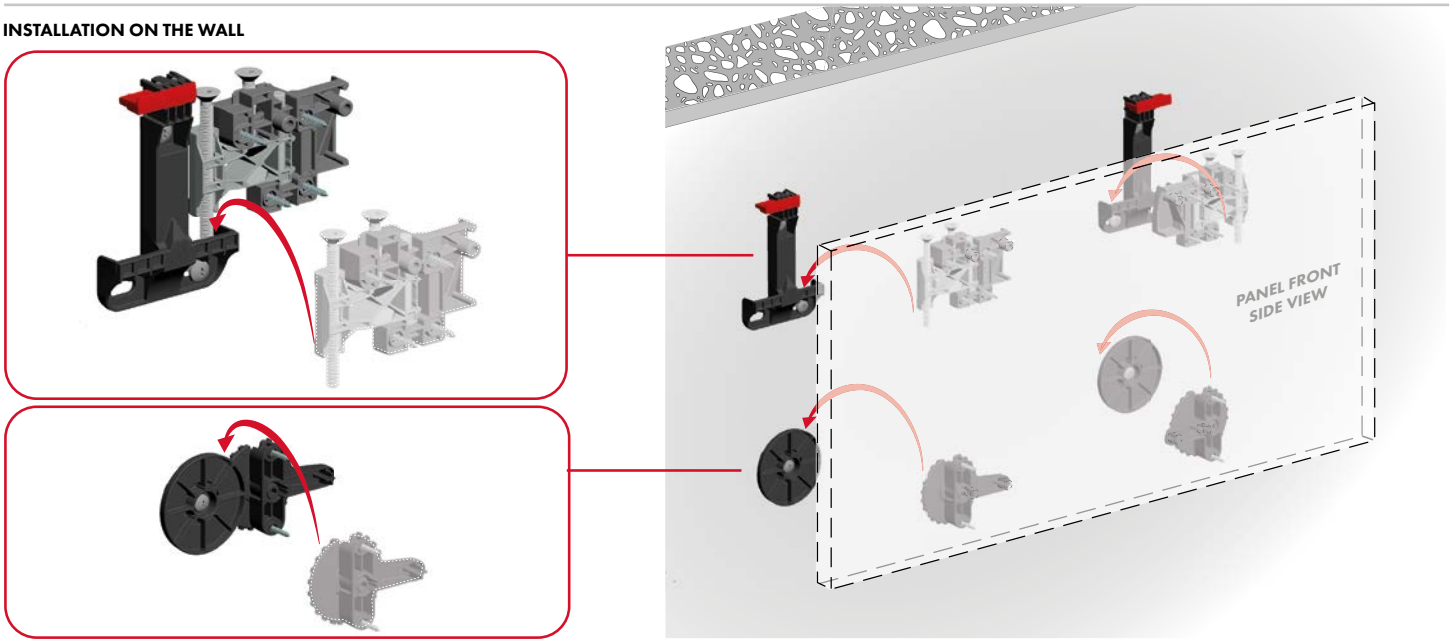

Back to contents

ADJUSTMENTS

IN-DEPTH ADJUSTMENT

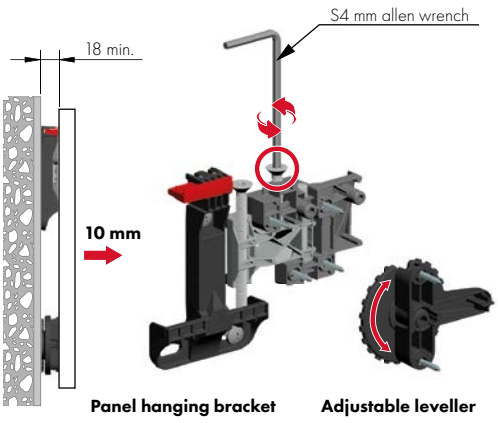

VERTICAL ADJUSTMENT

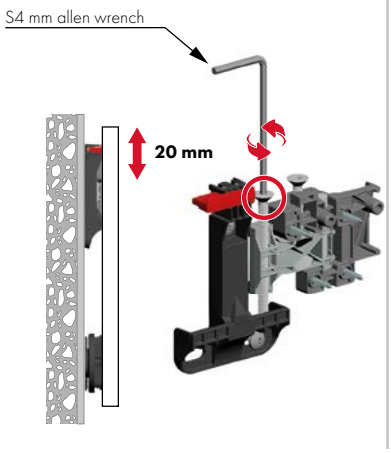

LATERAL ADJUSTMENT

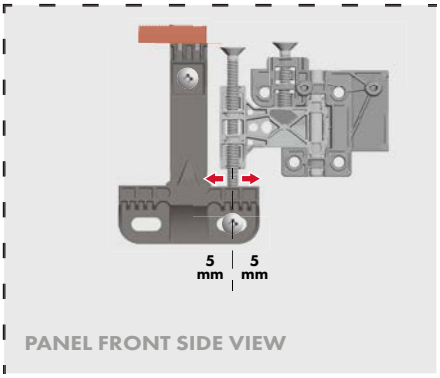

PANEL LOCKING

1 Adjustment locking wedge

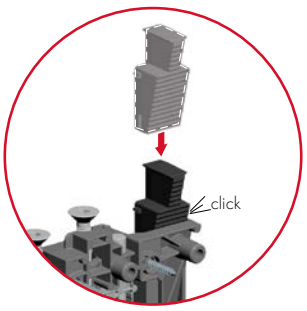

2 Anti-turnover locking

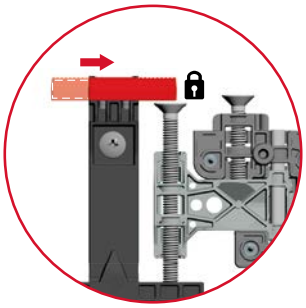

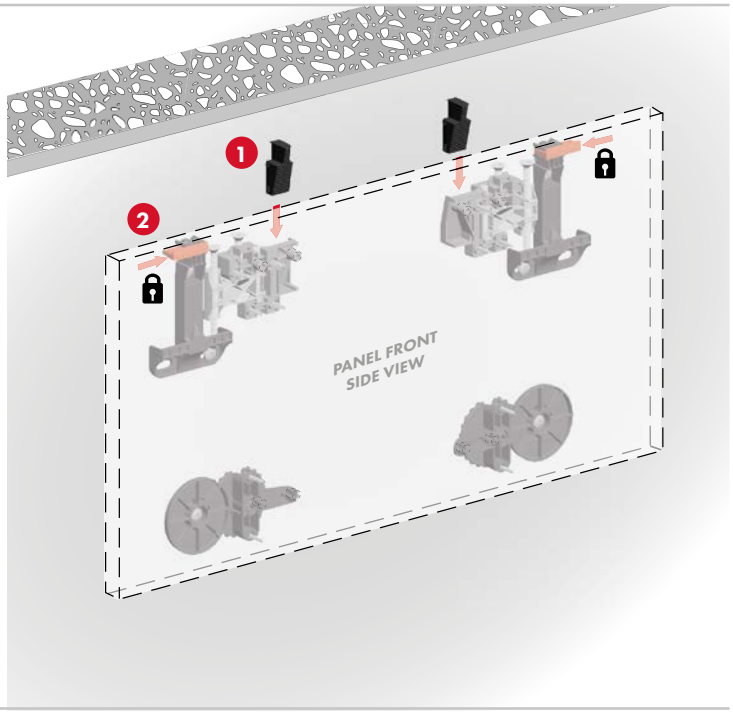

MINIMUM SERVICE GAP WITH THE WALL

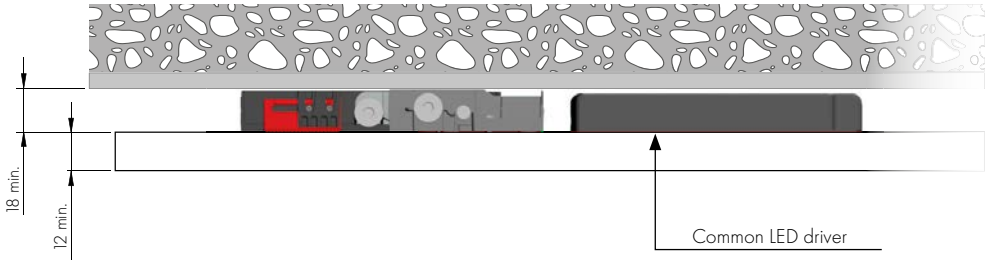

Back to contents

CHART FOR DETERMINING THE APPROPRIATE NUMBER OF MOUNTING COMPONENTS BASED ON PANEL DIMENSIONS

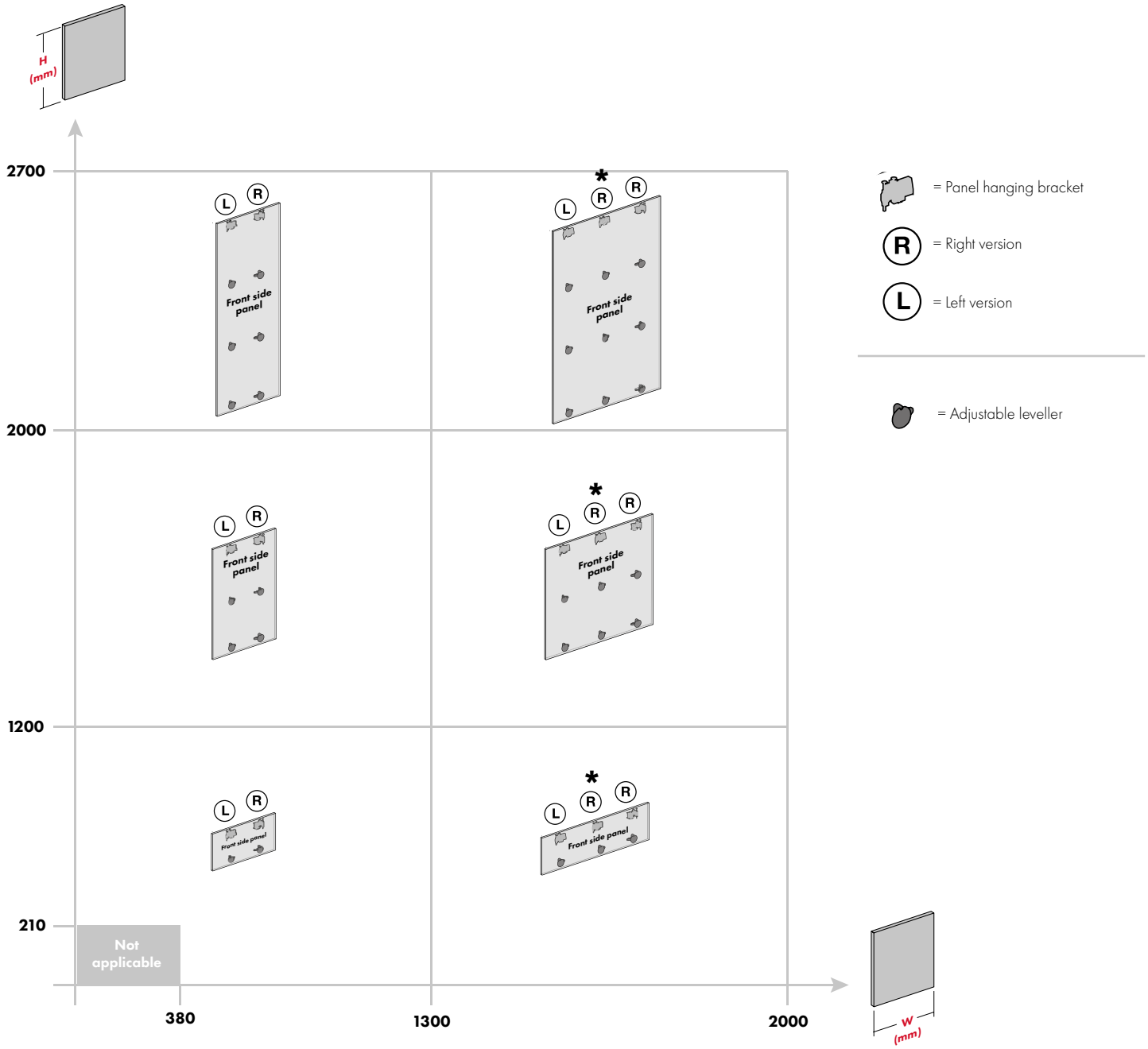

VERY IMPORTANT:

The present application chart is based on empirical tests using 18 mm thick chipboard panels. Some factors, such as material type and panel thickness, may require smaller or larger quantities of adjustable levellers than the one here mentioned. **We always recommend the customer to test the specific real application.**

* In the case of a third central element, the user is free to choose either panel hanging brackets **L** or panel hanging brackets **R**. In the documentation herein, all references, either of applications and drilling plans, are related to a third panel hanging bracket **R**.

Back to contents

PANEL HANGING BRACKETS

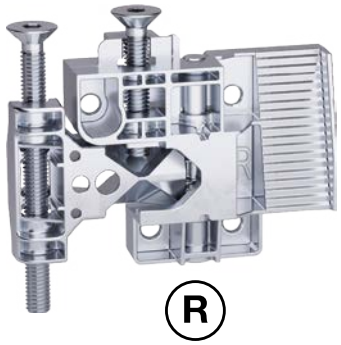

R

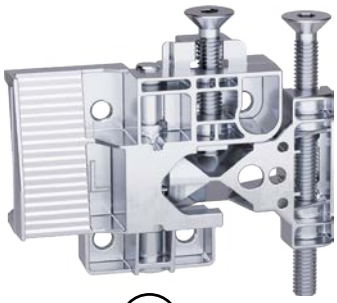

L

= S4

ST ZA

= 50 pcs.

P2502434ZN	R
P2408184ZN	L

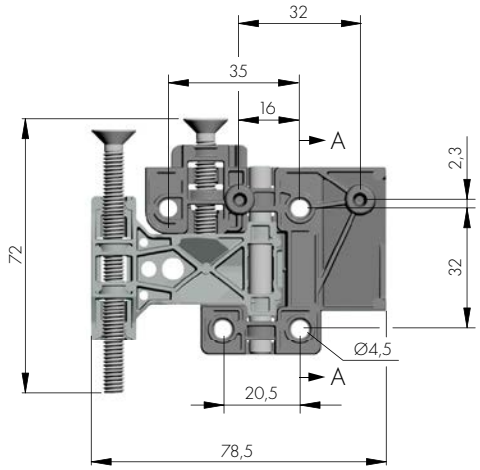

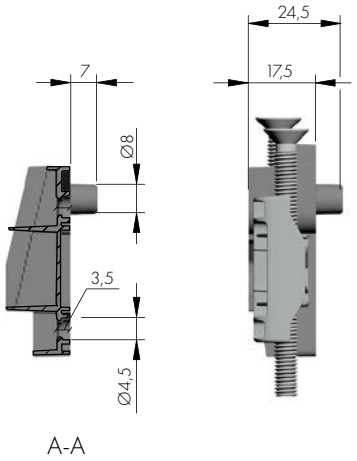

A-A

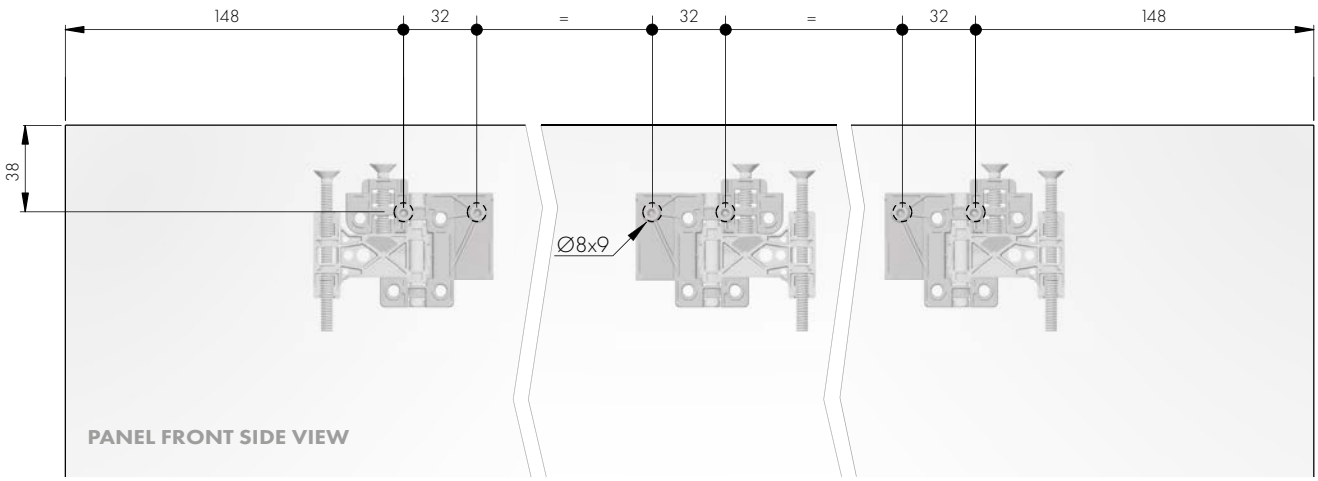

Back to contents

ADJUSTMENT LOCKING WEDGE

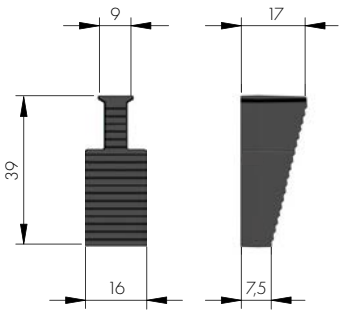



EP = 500 pcs.

63426060EA

WALL BRACKET

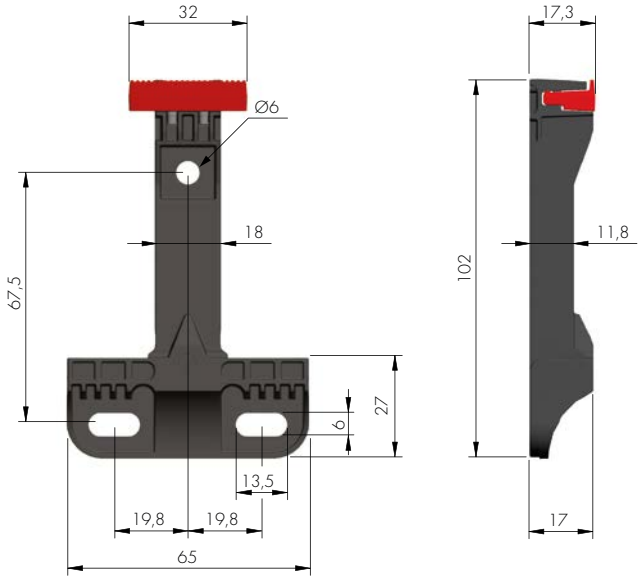

EP = 100 pcs.

63426090EA



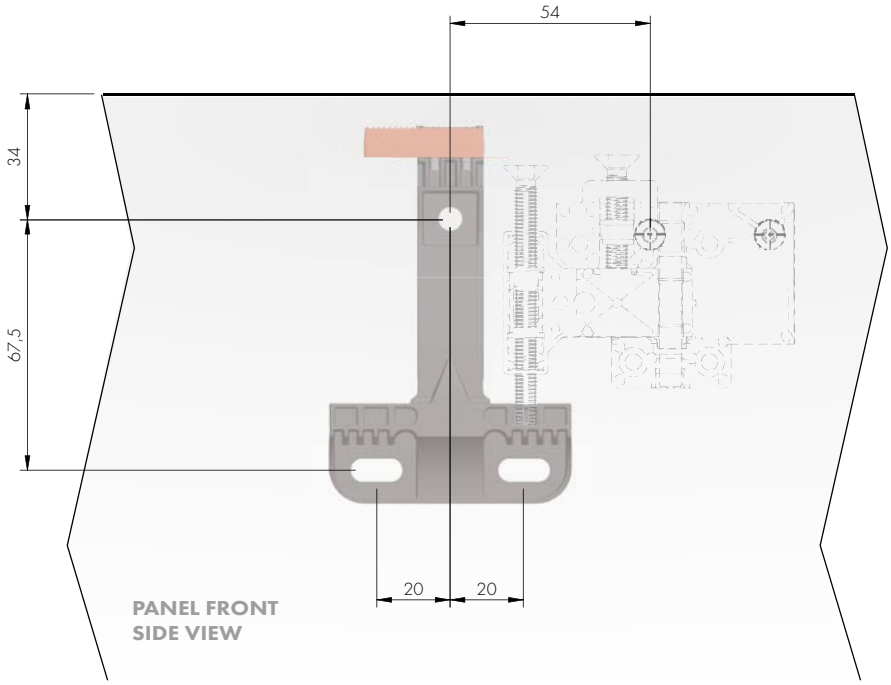

Back to contents

ADJUSTABLE AND HOLDING LEVELLER

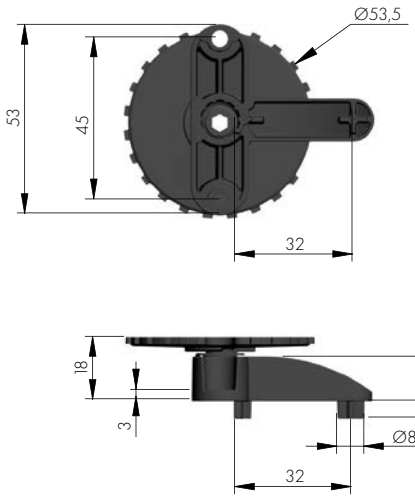

EP

= 200 pcs.

63426100EA



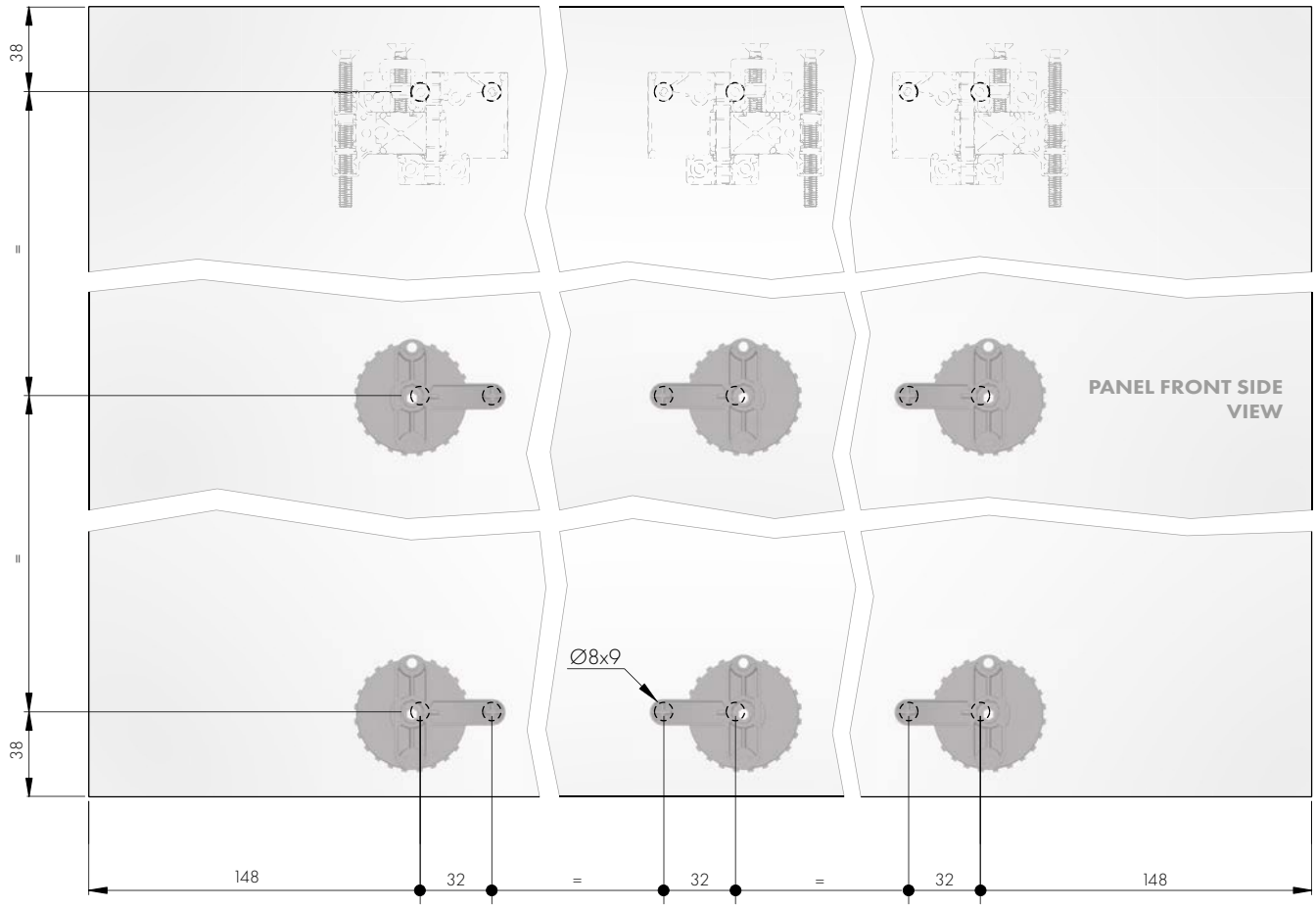

WALL SUPPORT FOR ADJUSTABLE LEVELLER

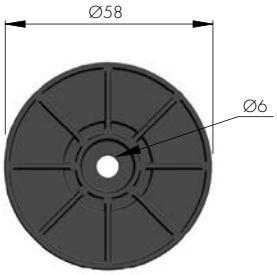

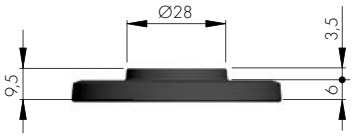

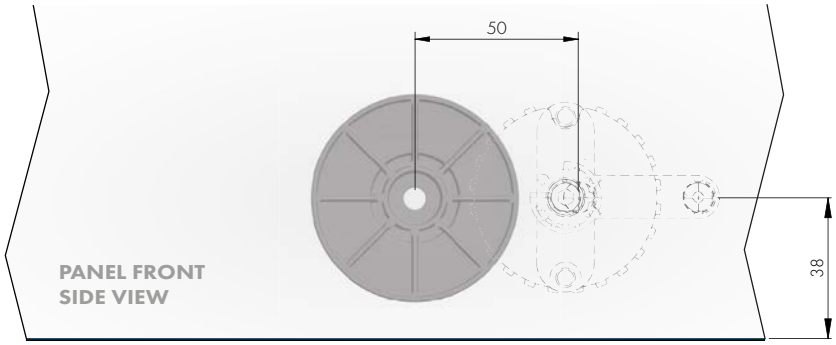

EP

= 200 pcs.

63426070EA	



FIXING ACCESSORIES FOR ADJUSTABLE LEVELLER AND PANEL HANGING BRACKET

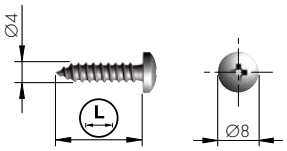



= PZ2

ST

= on request

60103260ZN	18	18 min.
60103250ZN	16	15 min.
60103240ZN	12	12 min.

Back to contents

SYMETRA OPTIONAL ACCESSORIES

CLIP FOR FILLER PROFILE

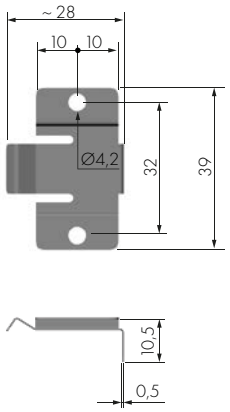

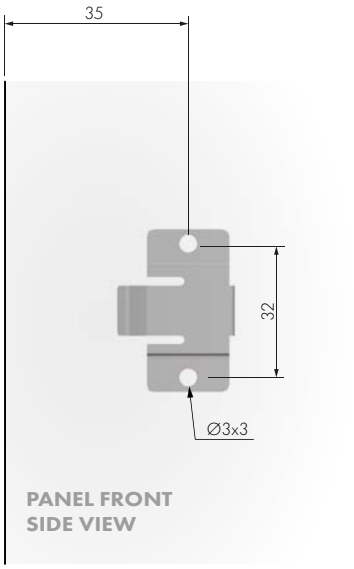

Fe

= 50 pcs.

63426140Z0



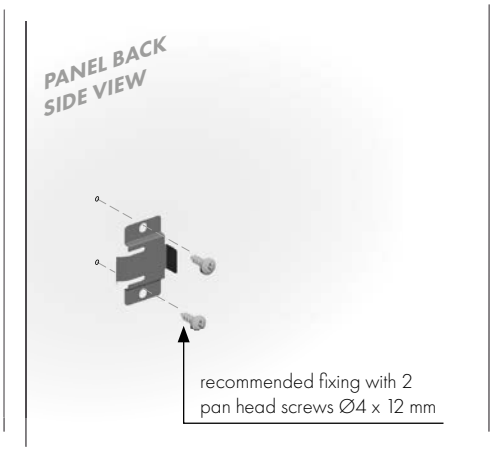

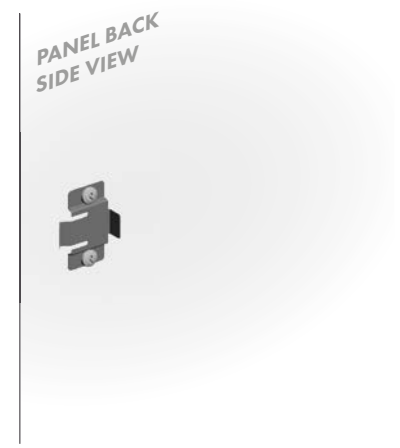

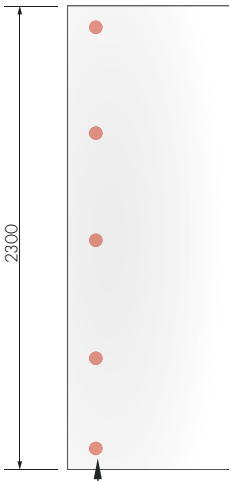

for fillers / led profiles with a height of 2300 mm, the application of 5 clips is recommended.

FIXING ACCESSORY FOR CLIP

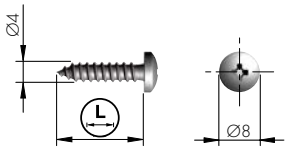



= PZ2

ST

= on request

60103240ZN

L: 12

1mm: 12 min.

Back to contents

FILLER PROFILE

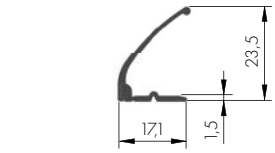

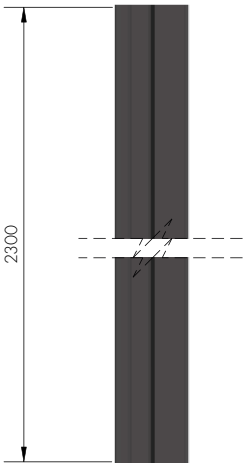

SR EP = 30 pcs.

63426150EA

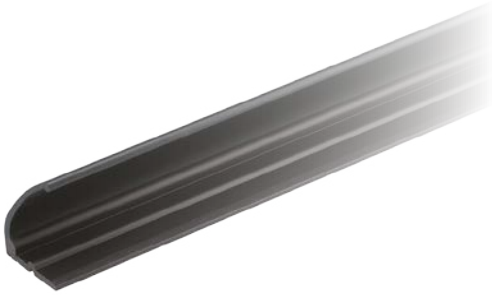

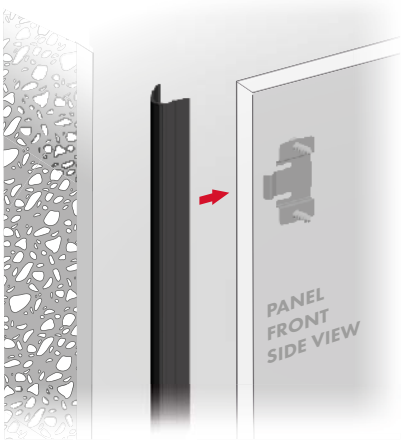

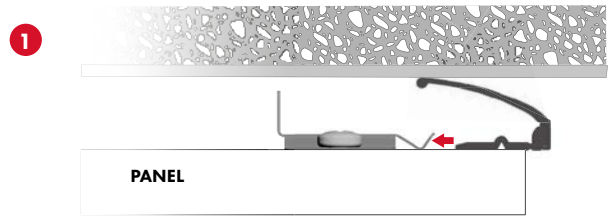

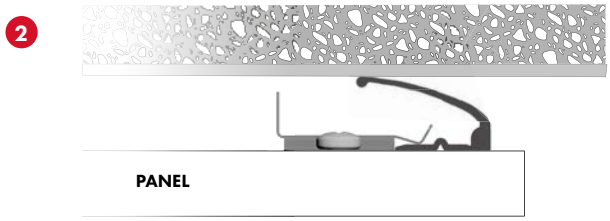

Clips allow the side LED profiles to be fixed to the composition.
(LED profiles not supplied)

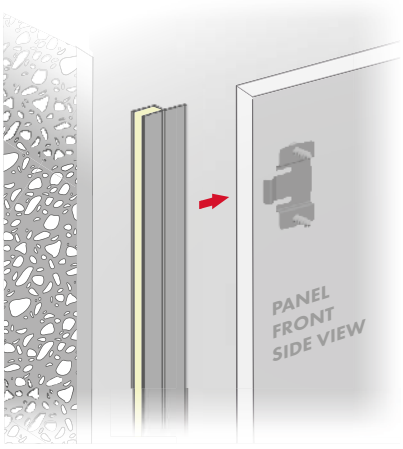

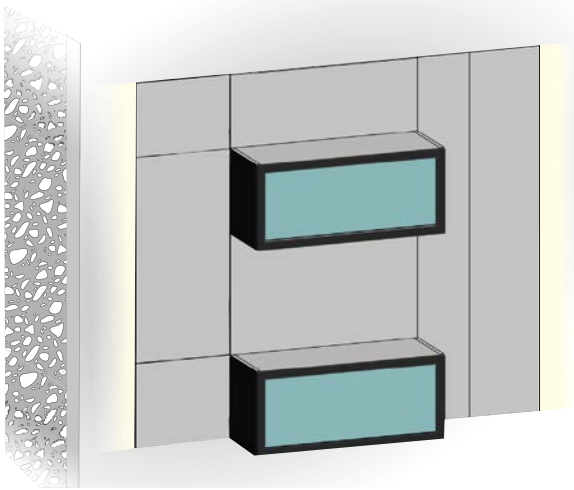

Back to contents

ITALIANA ferramenta

SYMETRA

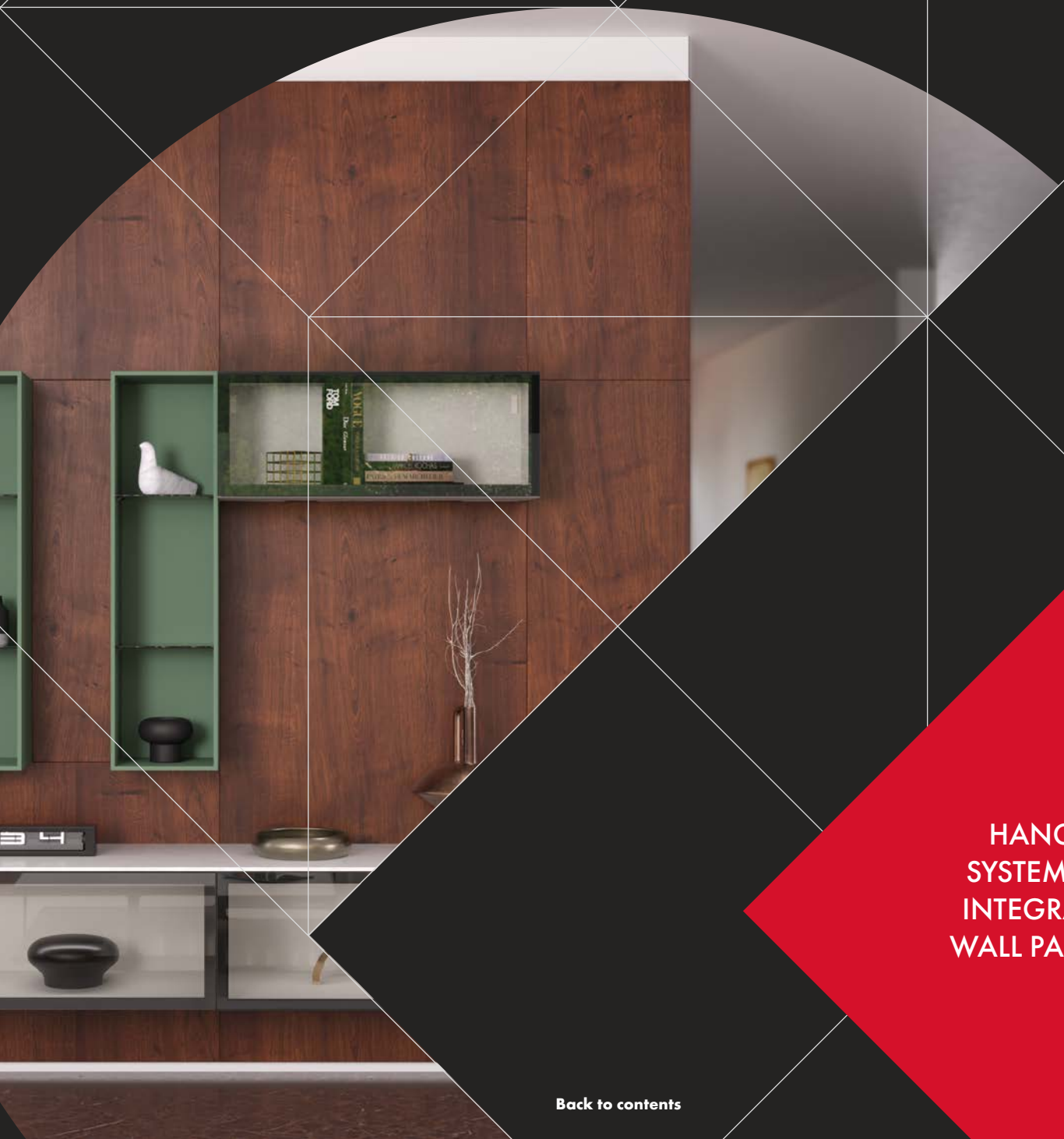

HANGING SYSTEM FOR INTEGRATED WALL PANELS

Back to contents

SYMETRA

This system is primarily designed for the realisation of large and complex compositions, which require the application of elements of a certain weight and size, which are fixed directly to the wall. Thanks to the application with wall bars, the number of holes in the wall is reduced to a minimum.

Innovative & Flexible

Freely plannable system for wall design with panels, shelves, wall cabinets, and ambient lighting.

Effortless Installation

Easily attach components to any furniture and structure them on any wall.

Seamless Compatibility

Works perfectly with LIBRA hangers, making it ideal for single panels and modular system walls.



12 mm min.

40 kg per hanger

PATENT PENDING
Certificates available on request.

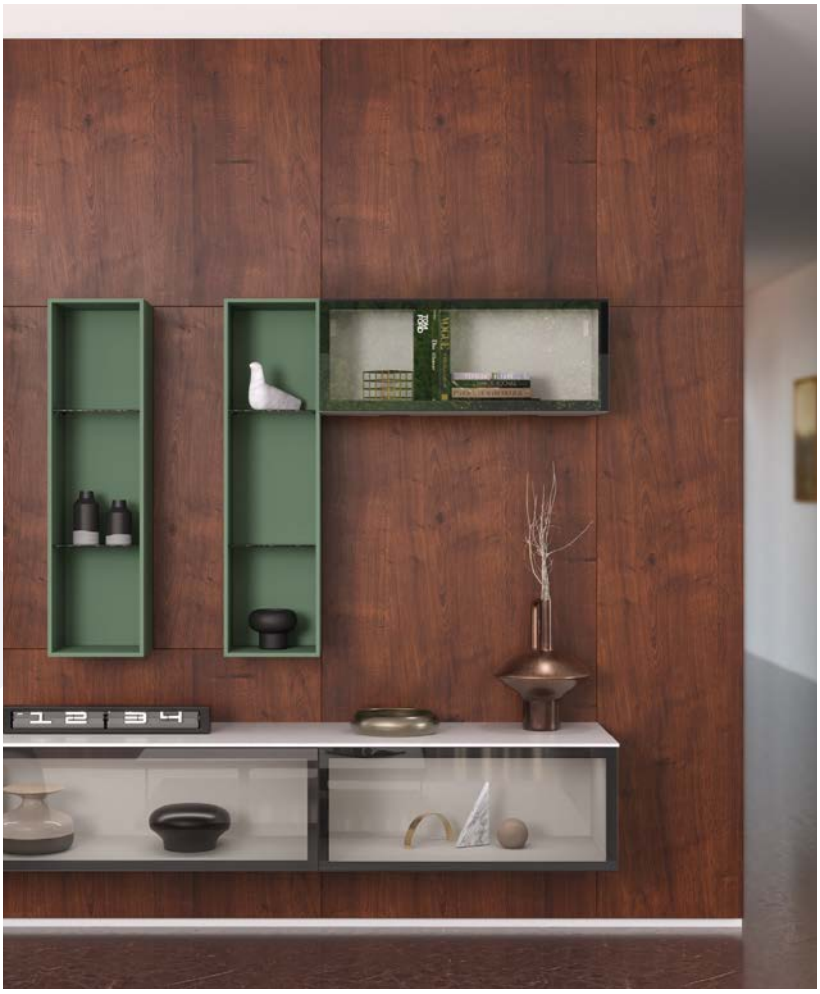

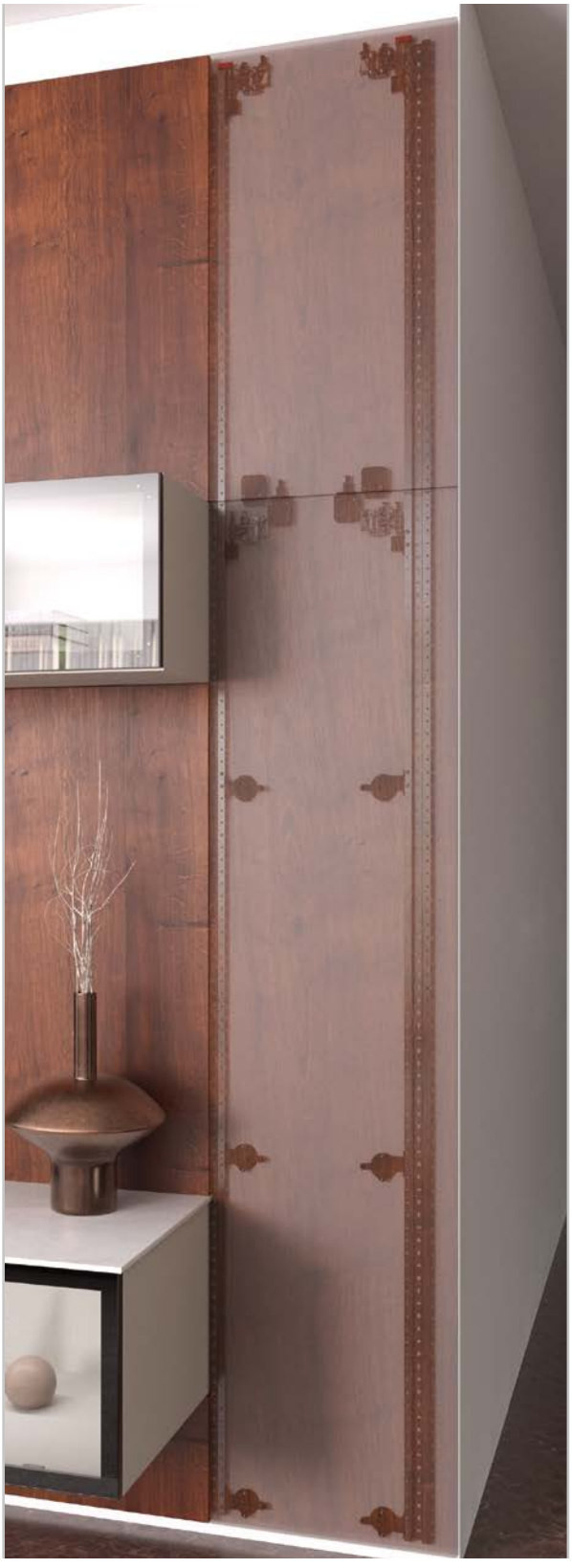



Back to contents

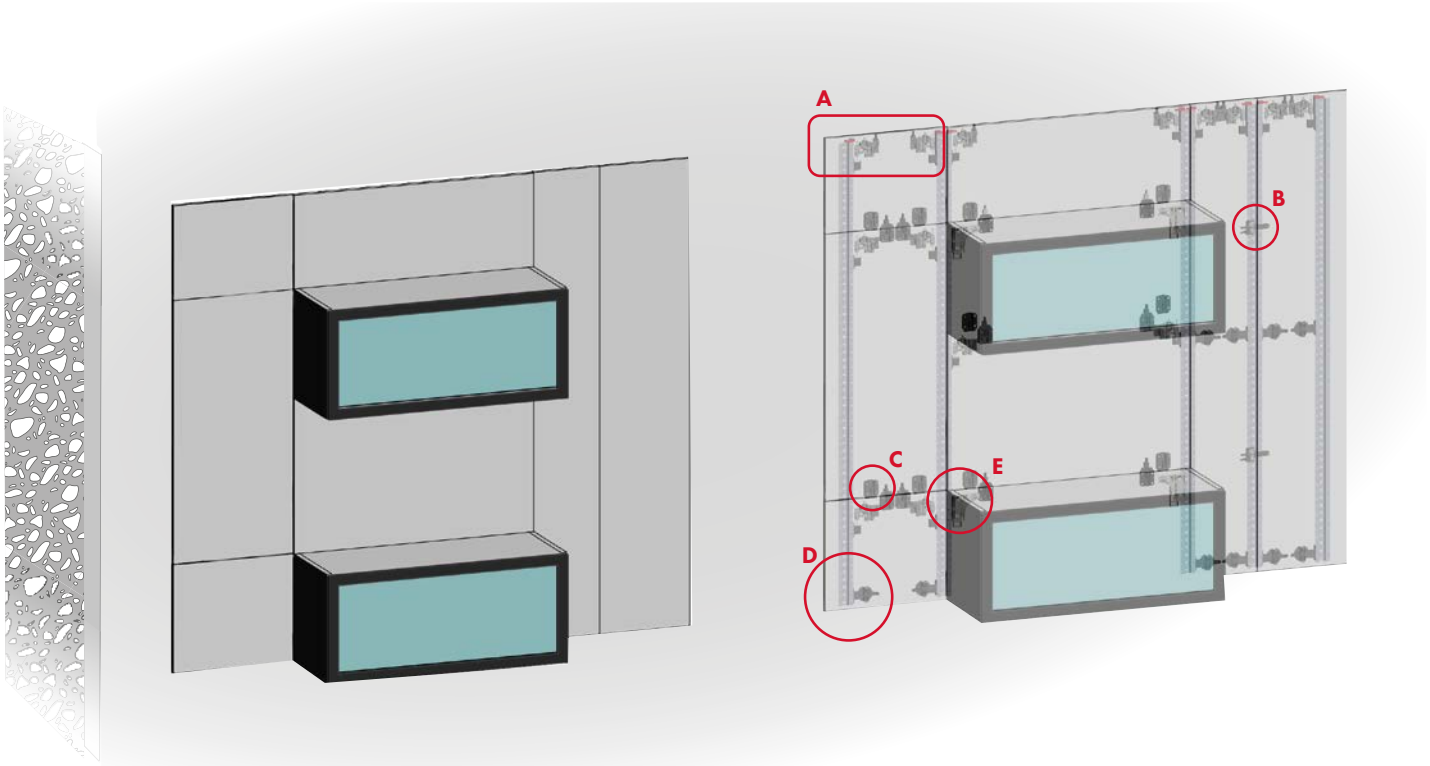

SYMETRA COMPONENTS AND FIXING DETAILS

A

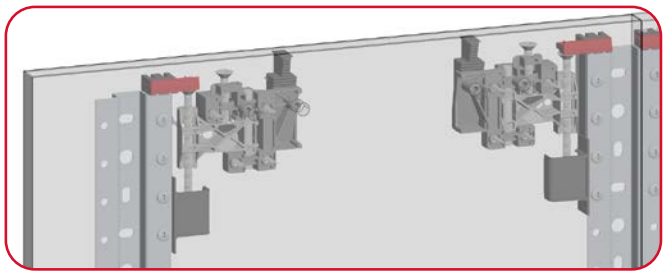

* Pan head screws Ø4 mm with variable length depending on the panel thickness used (see related accessory chart).

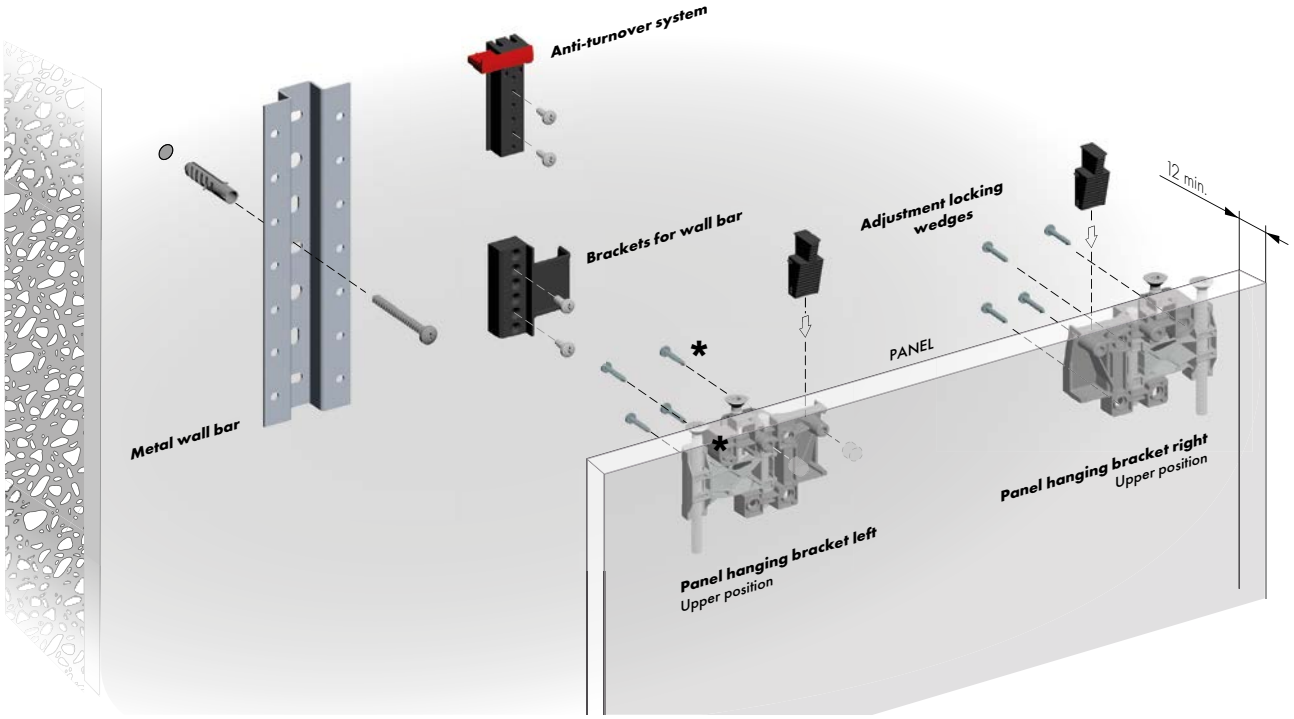

Back to contents

B

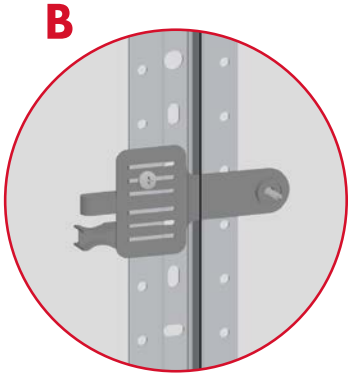

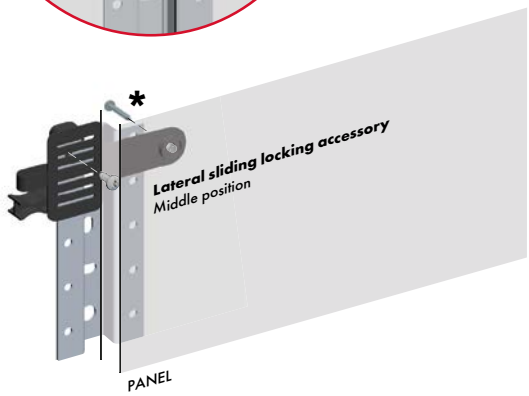

C

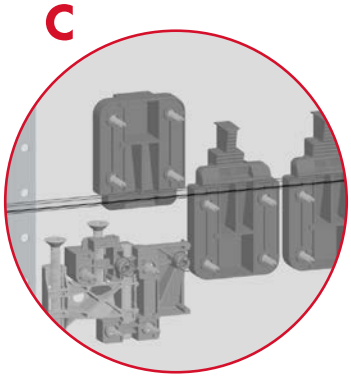

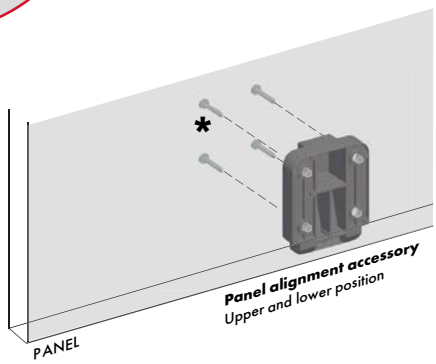

D

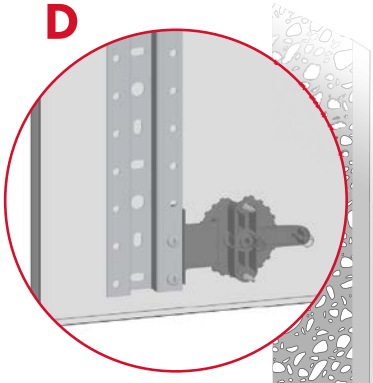

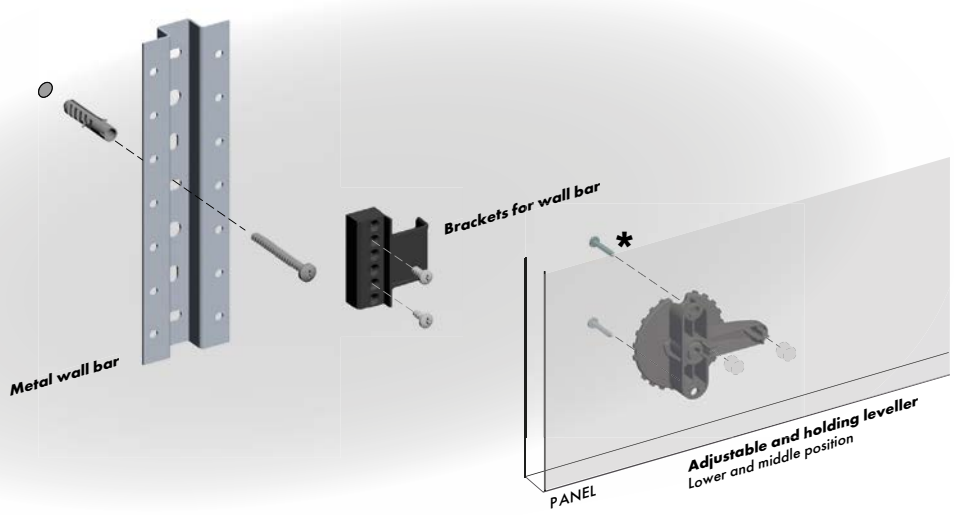

E

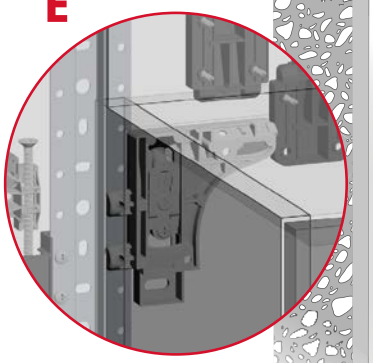

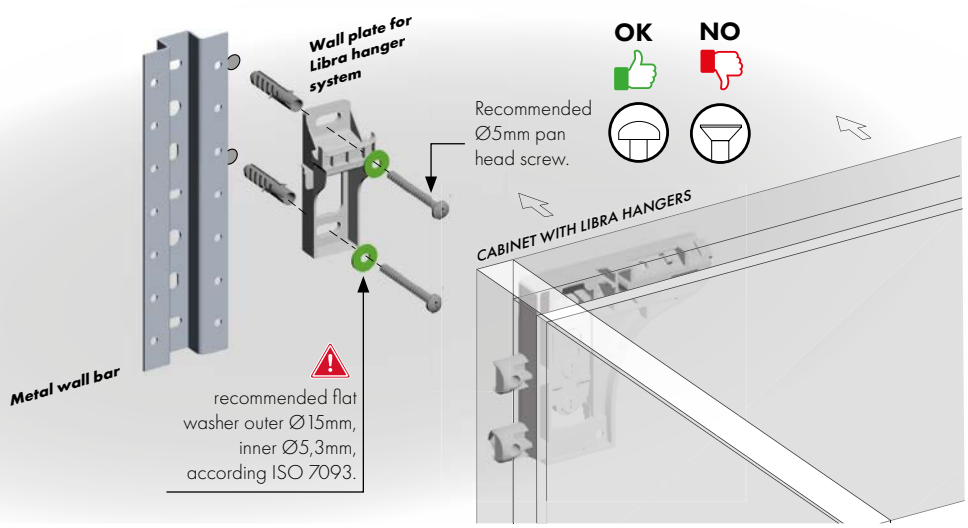

Back to contents

Multi-panel application on vertical columns.

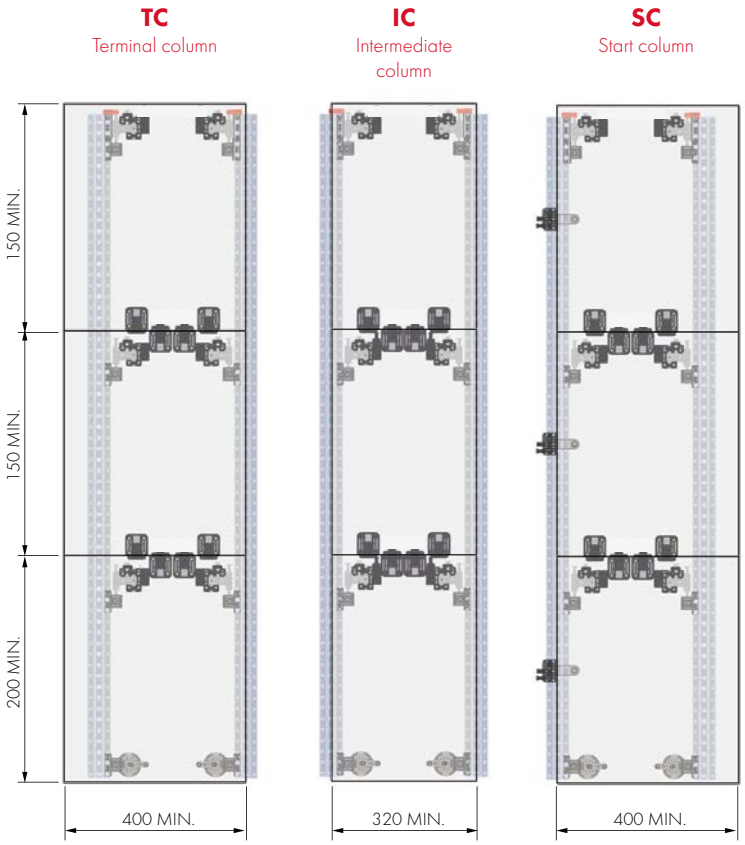

Full-size panel application on vertical columns.

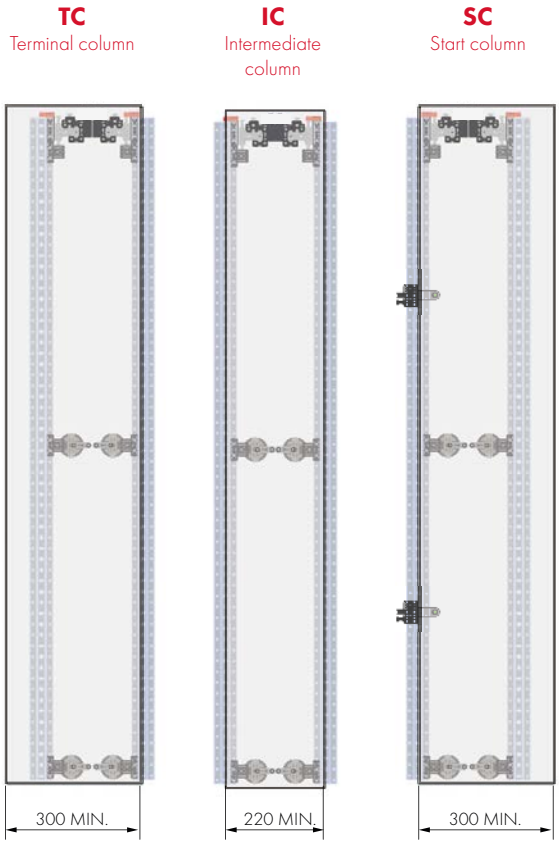

Back to contents

Multi-panel application on vertical columns.

MOUNTING AND ADJUSTMENT COMPONENTS APPLIED TO THE PANELS

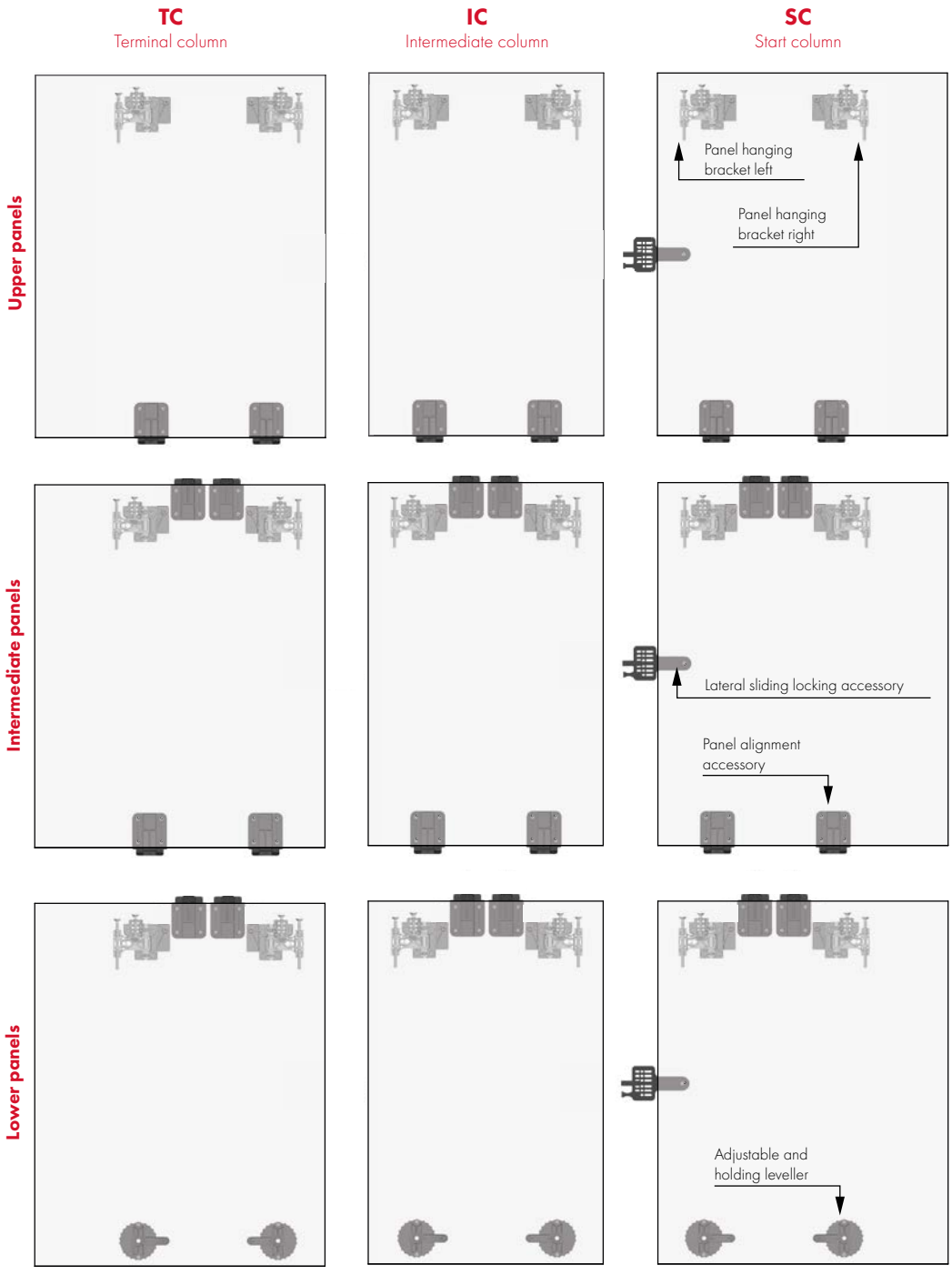

MOUNTING COMPONENTS APPLIED TO THE WALL BARS.

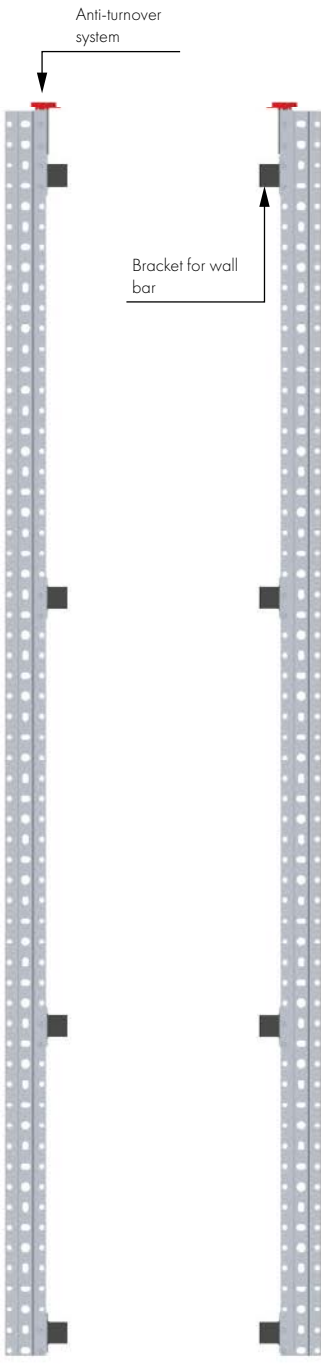

Back to contents

Full-size panel application on vertical columns.

MOUNTING AND ADJUSTMENT COMPONENTS APPLIED TO THE PANELS

TC
Terminal column

IC
Intermediate column

SC
Start column

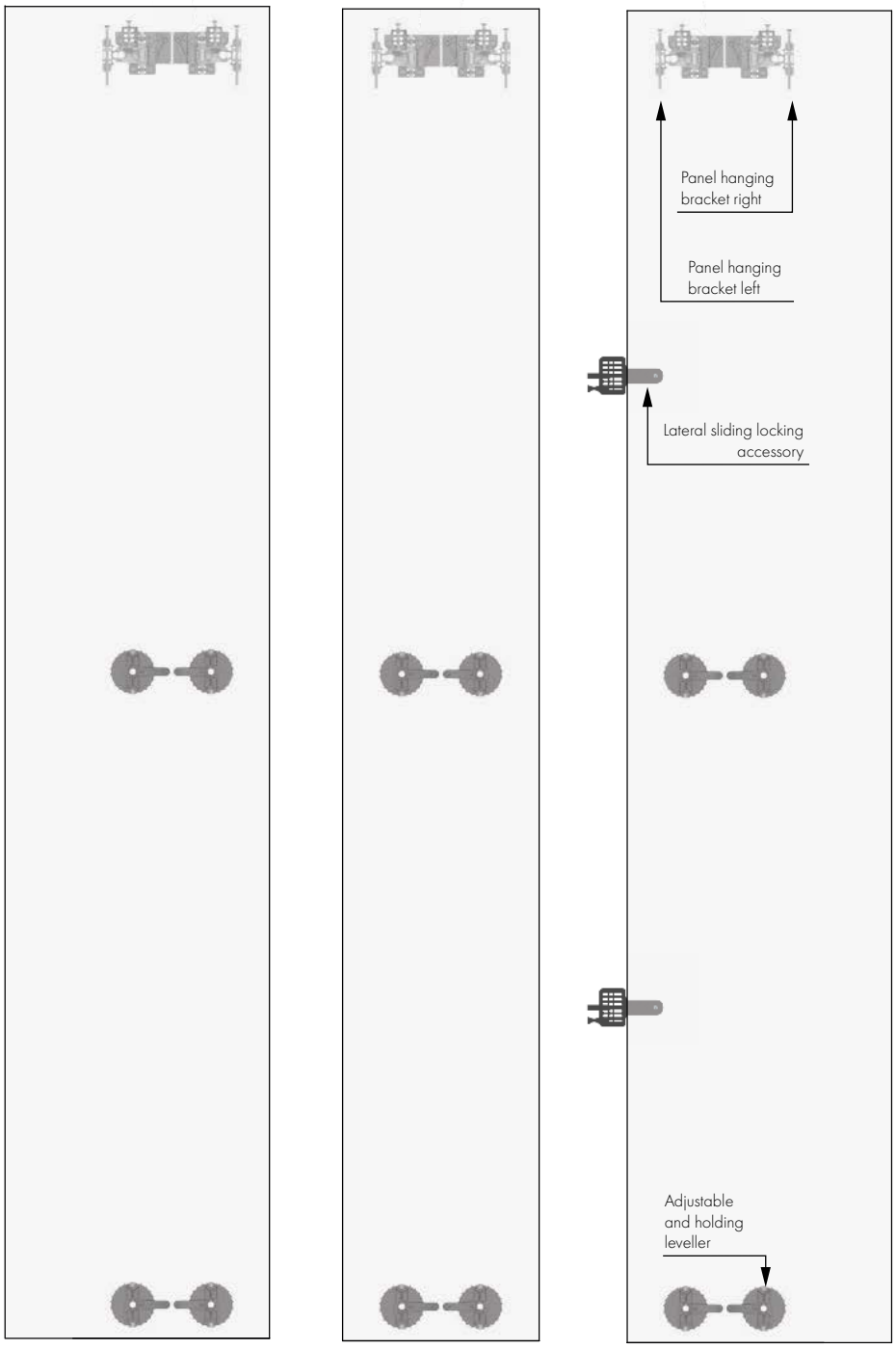

MOUNTING COMPONENTS APPLIED TO THE WALL BARS.

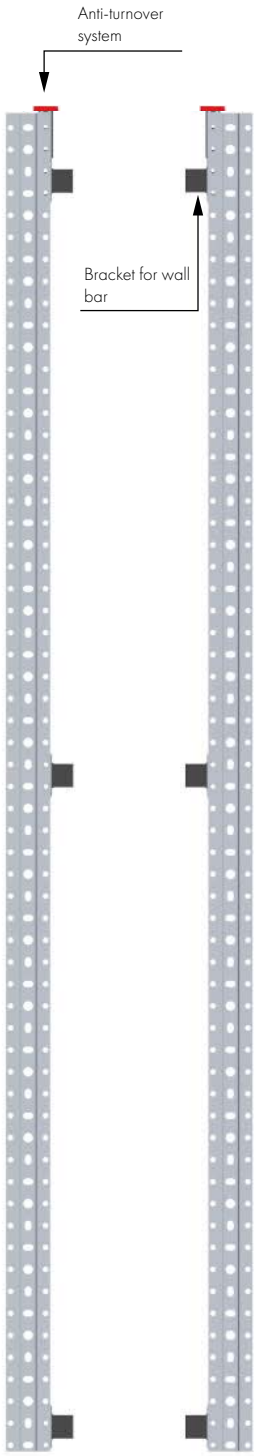

Back to contents

SEQUENCE FOR INSTALLING PANELS IN A SYMETRA-BASED INTEGRATED WALL PANELS SYSTEM

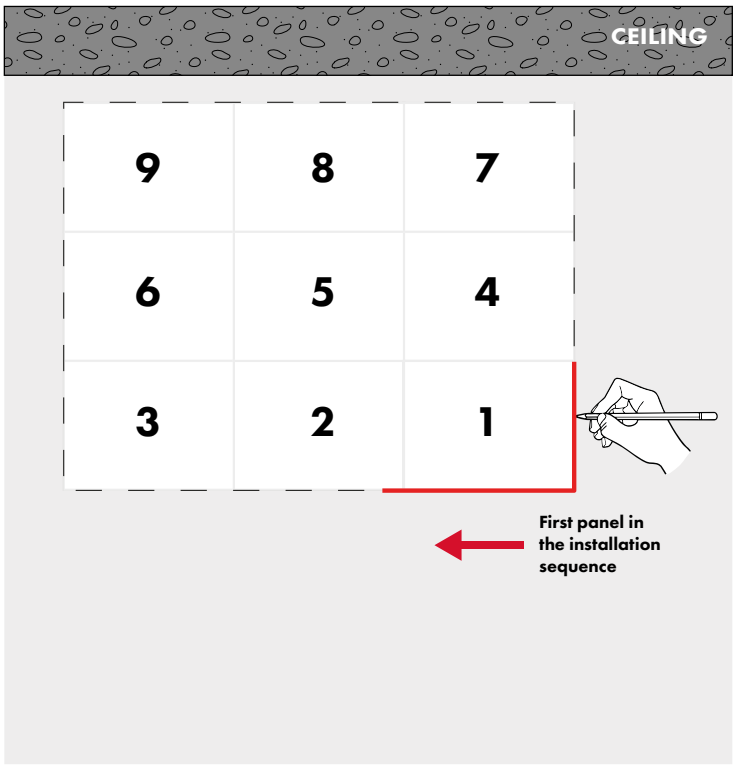

MINIMUM DISTANCE FROM THE CEILING

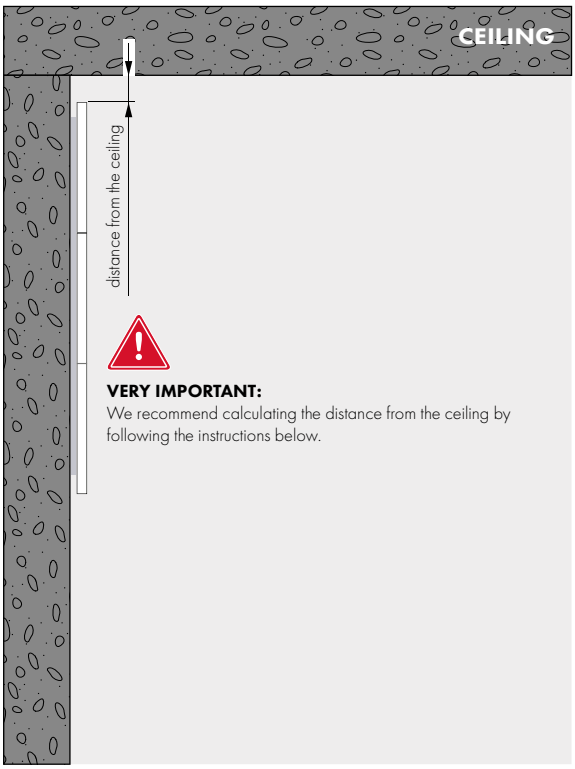

Minimum distance from the ceiling:
to allow installation of the panels.

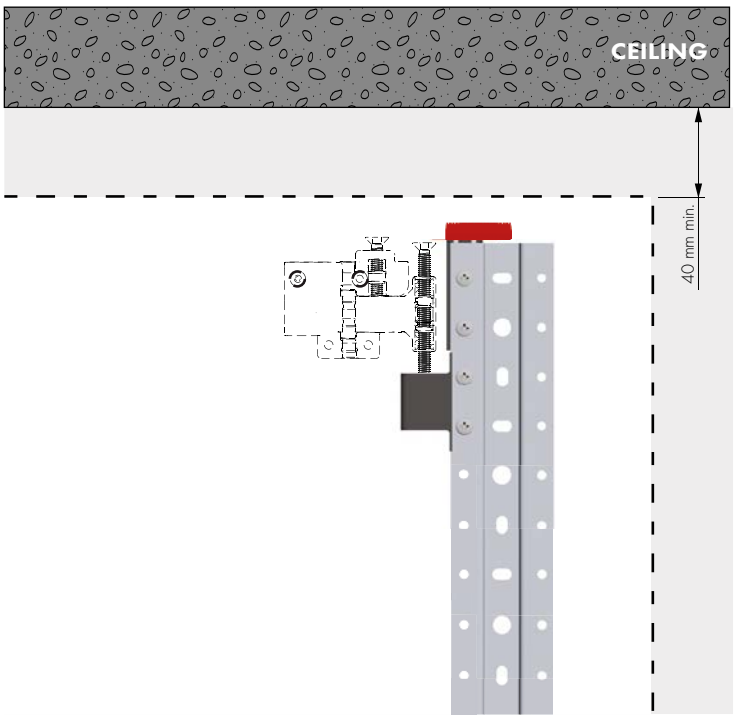

Minimum distance from the ceiling:
to allow easy adjustment of the hanging brackets with the panel installed.

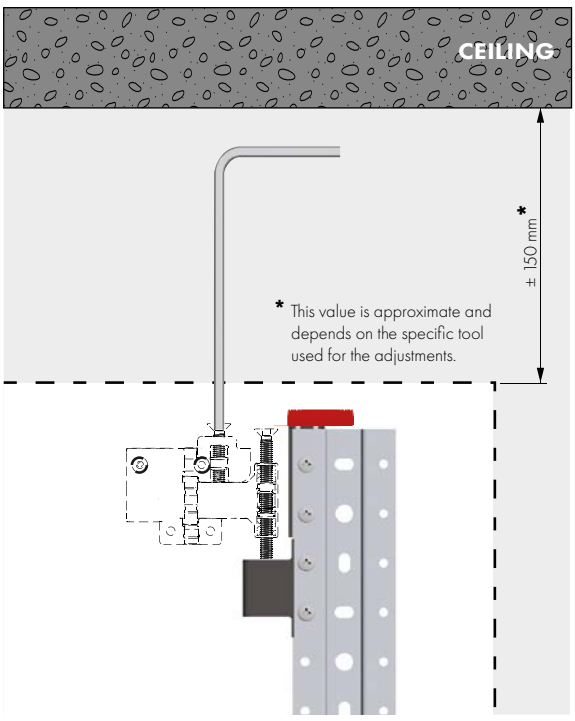

Back to contents

WALL BARS INSTALLATION

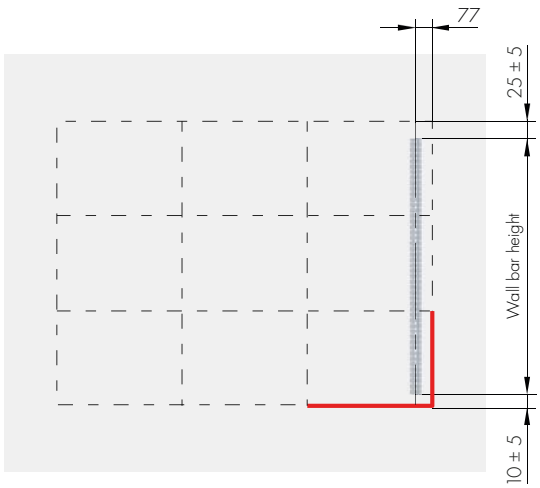

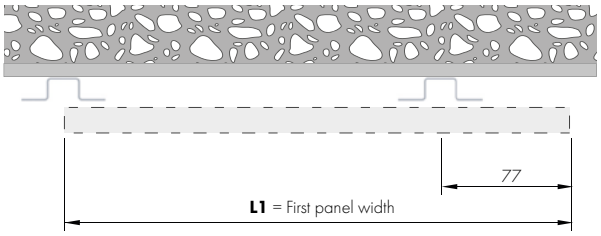

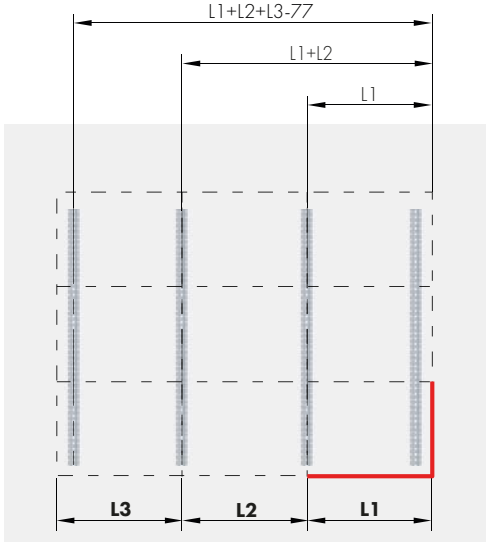

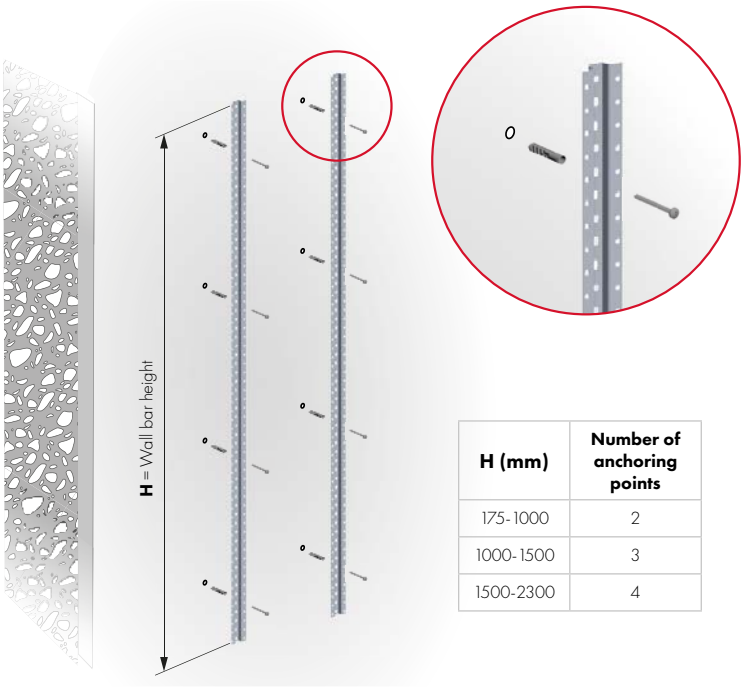

H (mm)	Number of anchoring points
175-1000	2
1000-1500	3
1500-2300	4

It is the responsibility of the customer:
- to ensure that the wall is of a suitable quality to hold the unit fixing in place.
- to use the proper hardware fittings according to the construction of the wall.

Back to contents

BRACKETS FOR WALL BAR INSTALLATION

Use the height of the first panel as a reference to begin mounting the brackets for the wall bars

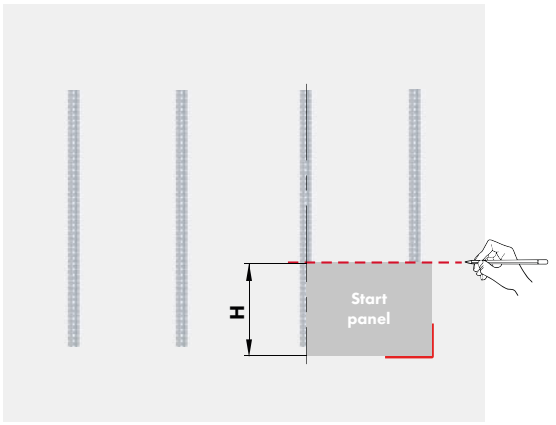

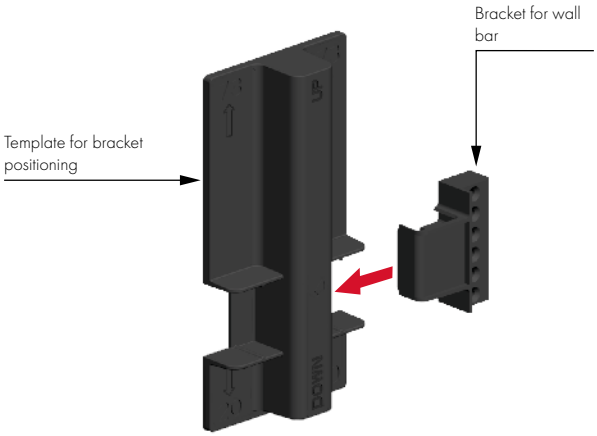

Mounting references for fixing brackets to the wall bars.

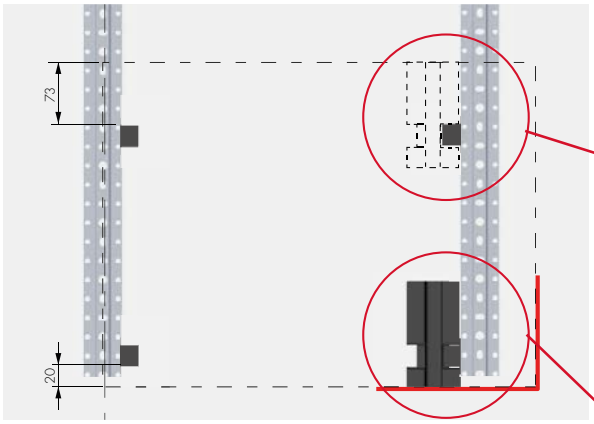

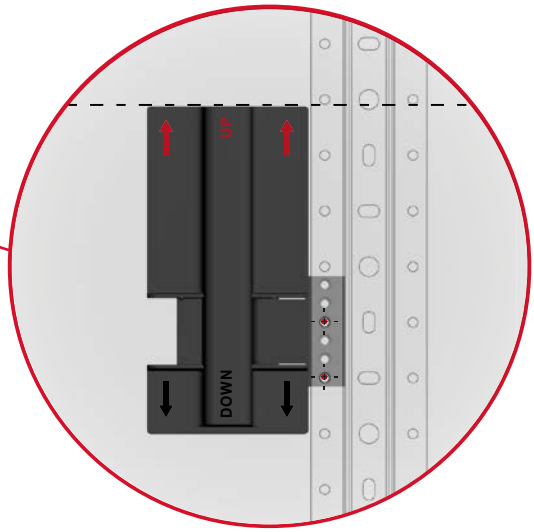

VERY IMPORTANT:
Secure the screws in the first available holes that intersect with the ones on the wall bar.

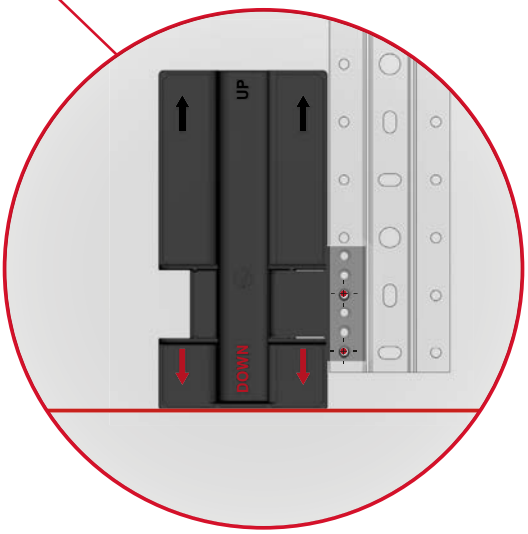

Fixing detail

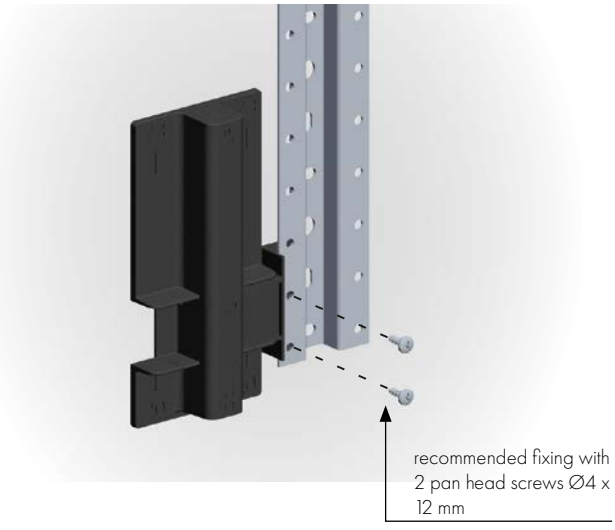

Back to contents

ANTI-TURNOVER SYSTEM FOR WALL BAR INSTALLATION

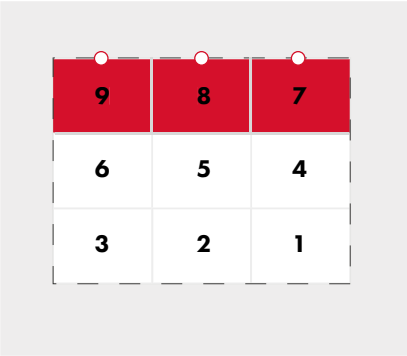

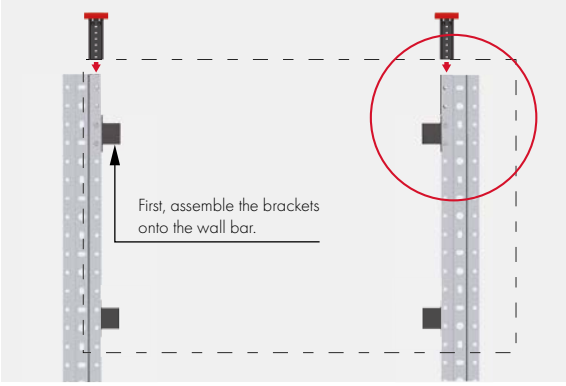

Fixing detail

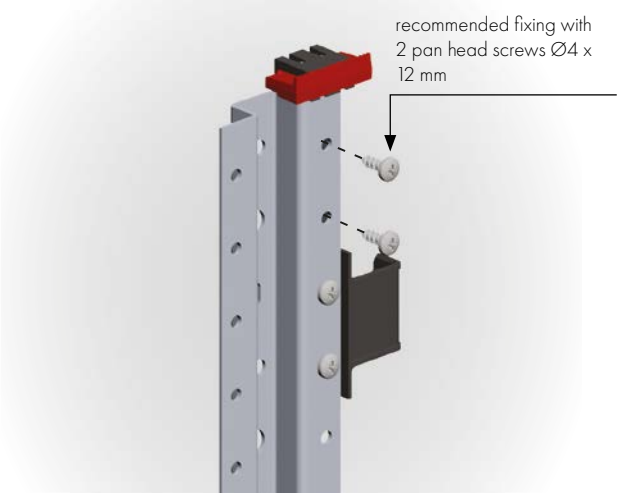

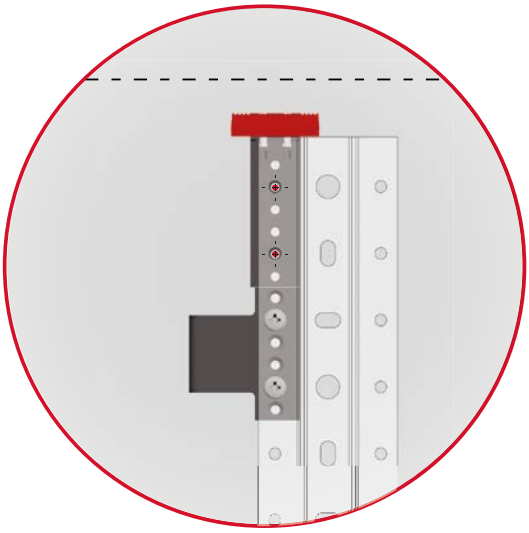

VERY IMPORTANT:
Secure the screws in the first available holes that intersect with the ones on the wall bar.

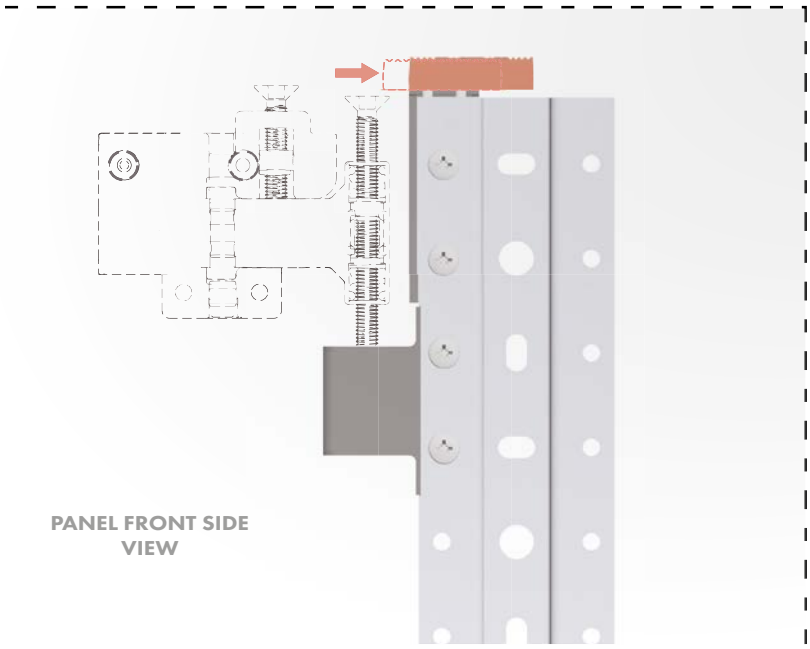

VERY IMPORTANT:
First slide the anti-turnover system device so that it does not interfere with the hanger.

Back to contents

PANEL INSTALLATION ON WALL BARS

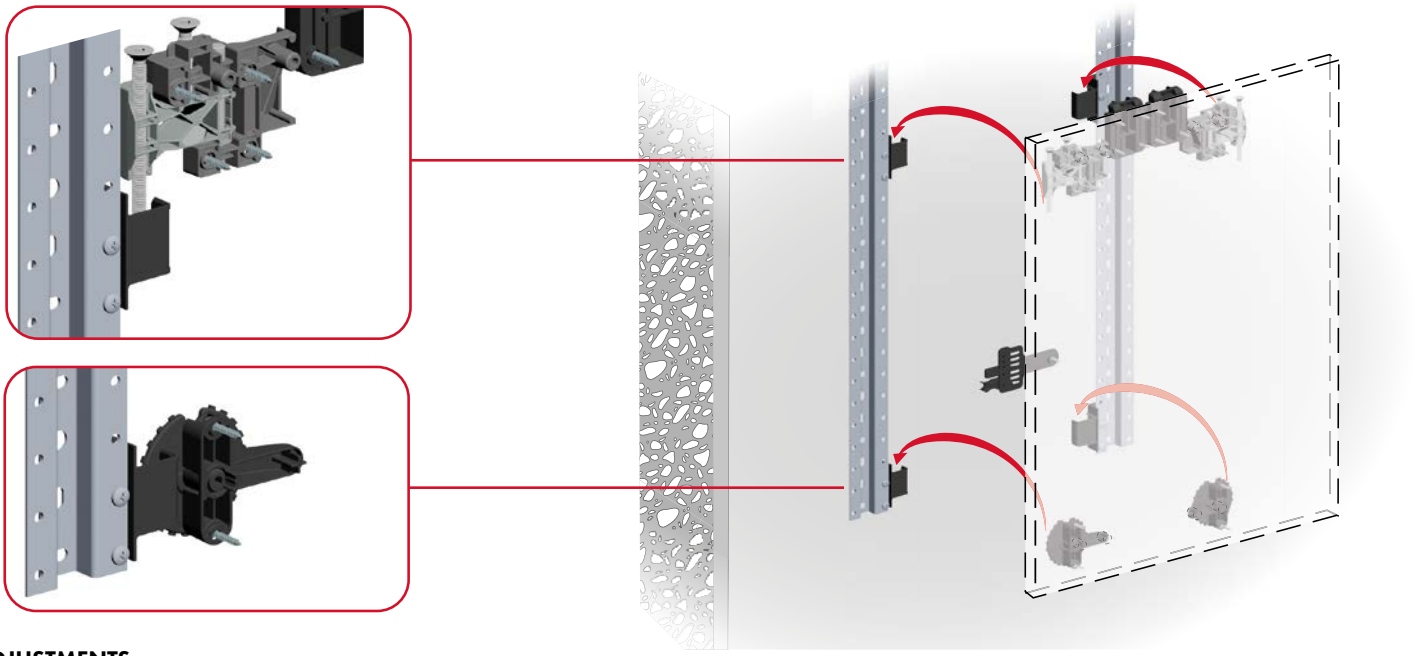

ADJUSTMENTS

IN-DEPTH ADJUSTMENT

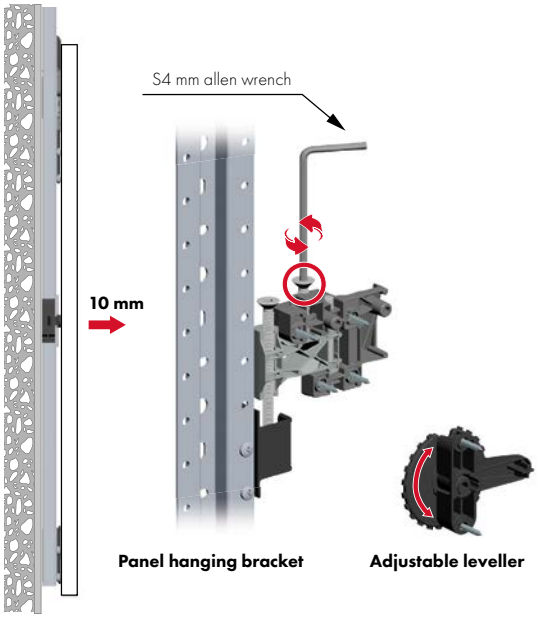

VERTICAL ADJUSTMENT

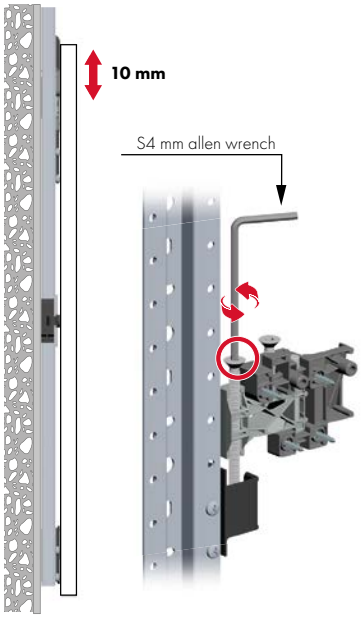

LATERAL ADJUSTMENT

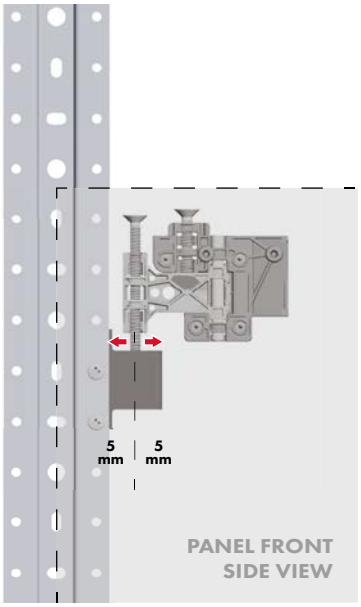

INSERTION OF ADJUSTMENT LOCKING WEDGES

INTEMEDIATE AND LOWER PANELS

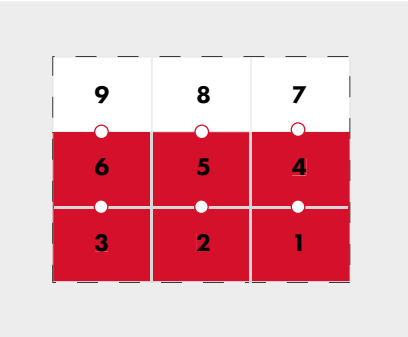

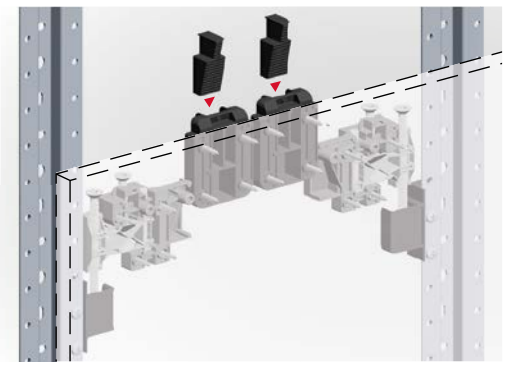

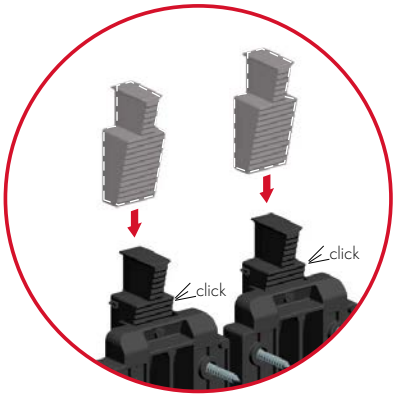

Back to contents

UPPER PANELS AND ACTIVATION OF ANTI-TURNOVER LOCKING SYSTEM

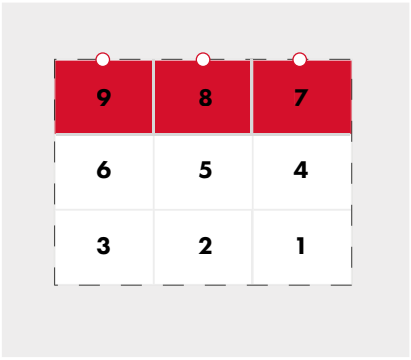

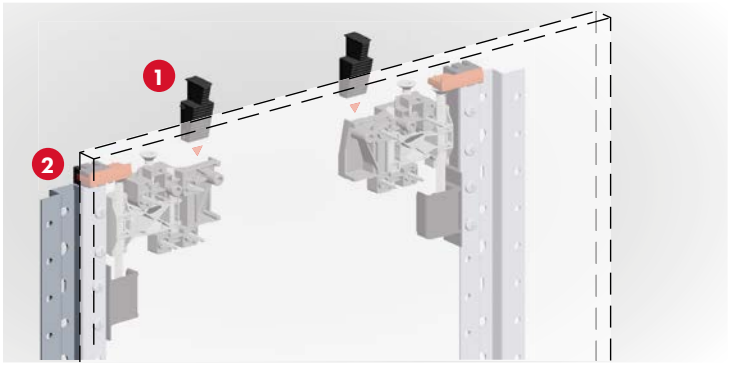

1 Adjustment locking wedge

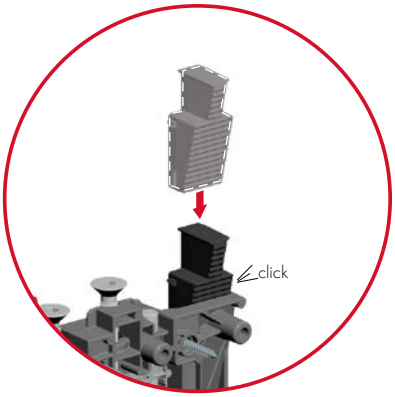

2 Anti-turnover locking

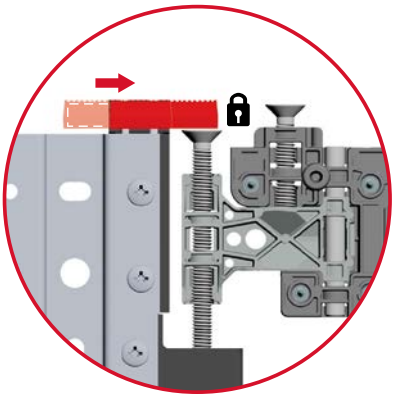

LATERAL SLIDING LOCKING ACCESSORY INSTALLATION

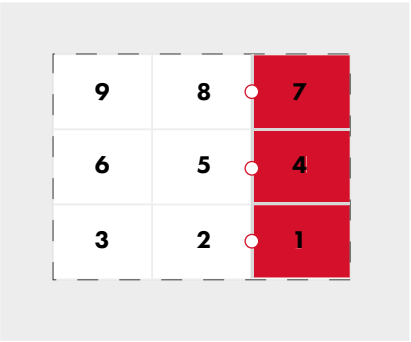



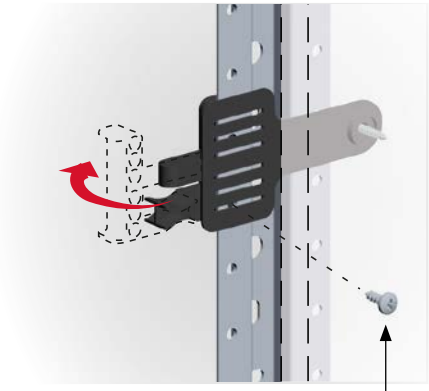

recommended fixing with
1 pan head screws Ø4 x
12 mm.

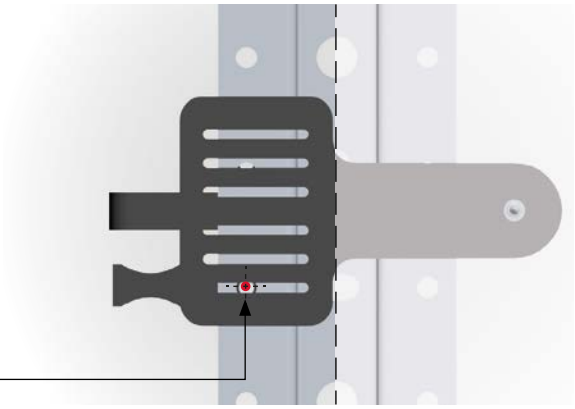

VERY IMPORTANT:
Fasten the screw in the first available hole

Back to contents

MINIMUM SERVICE GAP WITH THE WALL

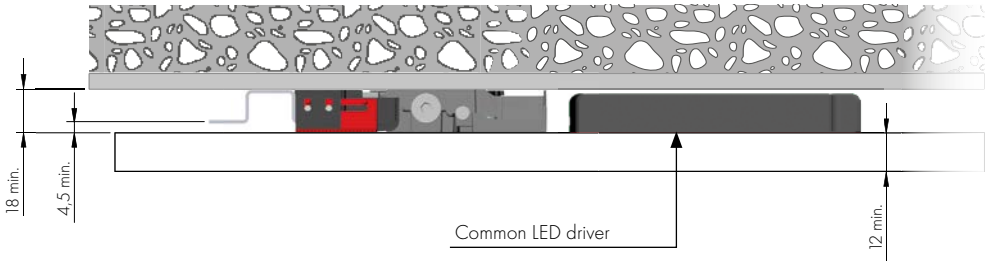

NUMBER OF ADDITIONAL ADJUSTABLE LEVELLERS REQUIRED PER PANEL HEIGHT

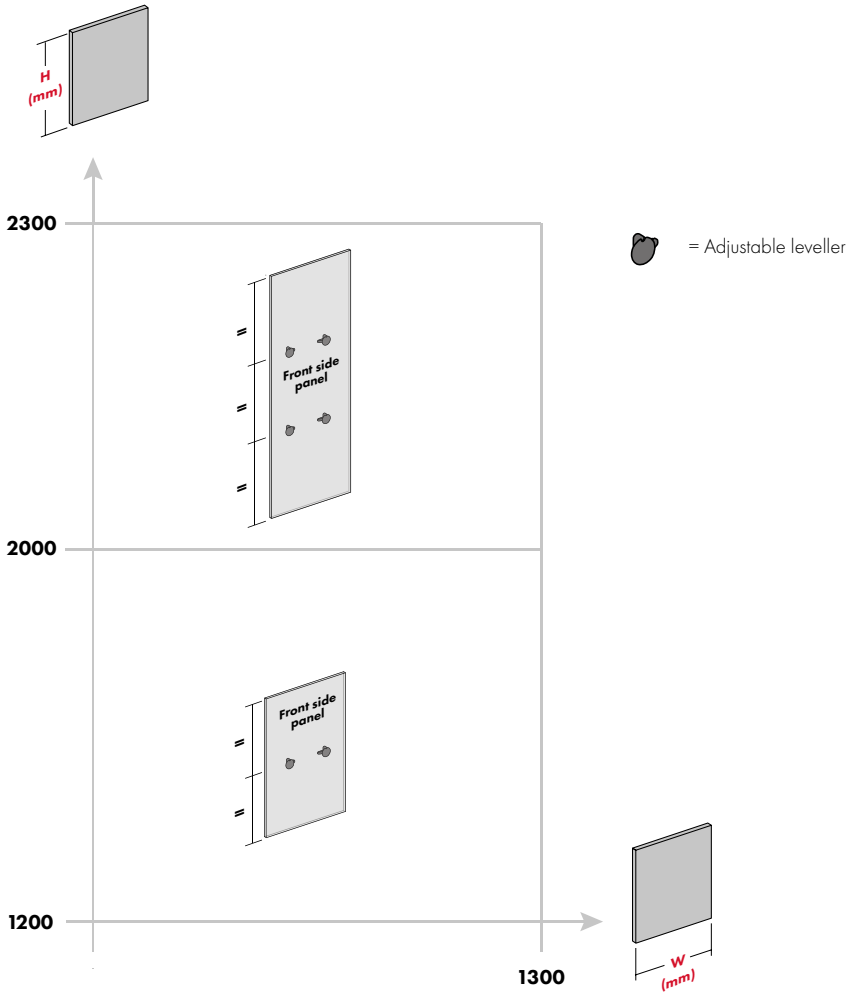

VERY IMPORTANT:

The present application chart is based on empirical tests using 18 mm thick chipboard panels. Some factors, such as material type and panel thickness, may require smaller or larger quantities of adjustable levellers than the one here mentioned. **We always recommend the customer to test the specific real application.**

In case of panel dimensions exceeding those indicated in the table, please contact our technical department.

Back to contents

FIXING OF SUSPENDED CABINETS WITH DEDICATED WALL PLATE FOR LIBRA HANGERS SYSTEM

Fixing of the panel alignment accessories onto the cabinets

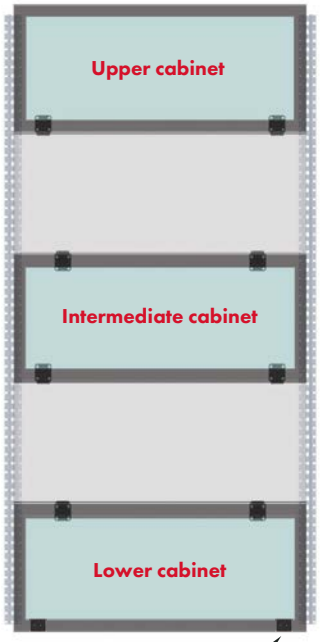

REKORD TECH H 100 mm leveller

Drilling plan on the top panel of the cabinet



Drilling plan on the bottom panel of the cabinet



VERY IMPORTANT:
The installation of cabinets on the outer sides of the wall composition is not recommended, as this prevents the application of end cover profiles or any lighting accessories.

Apllication of REKORD TECH H 100 mm levellers on the bottom panel of the lower cabinet

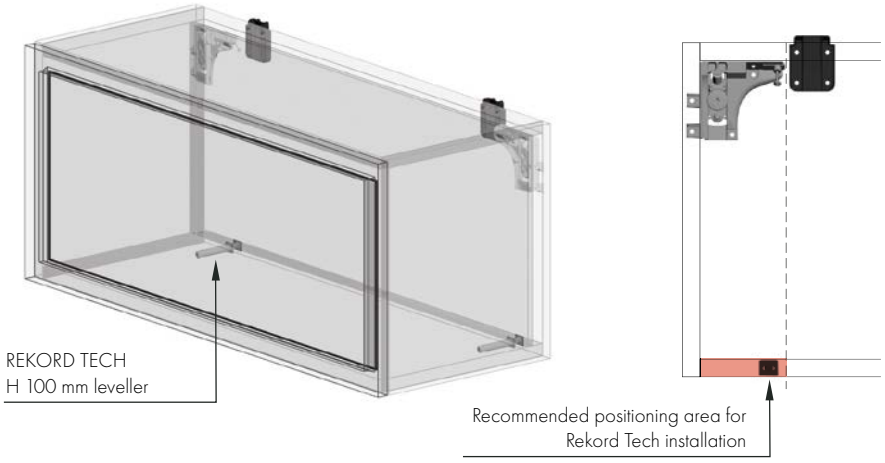

Alternative adjustment holes

Inside the cabinet



Under the cabinet

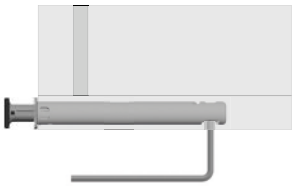

REKORD TECH H 100 mm



3030306000

Drilling plan

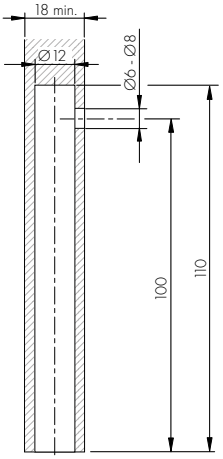

Installation and adjustments

Step 1:
Rekord Tech inserting into the hole in the bottom panel.

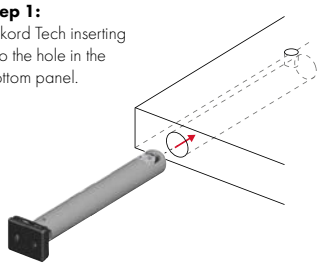

Step 2: Adjust the leveller until the space between the wall and the cabinet is 18 mm min.

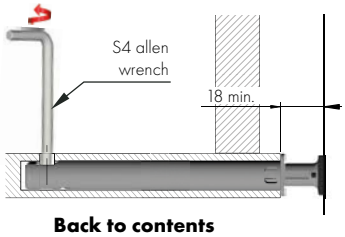

Step 3: Rekord Tech further adjustment, if necessary.

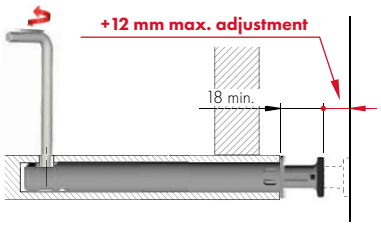

Back to contents

Use the height of the cabinet as a reference

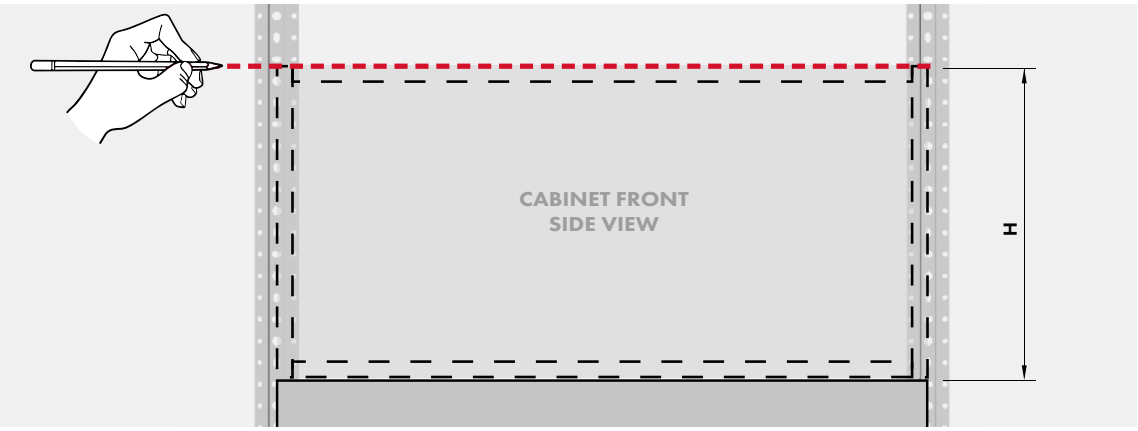

Define the Y dimension according to the version of Libra hangers in use.

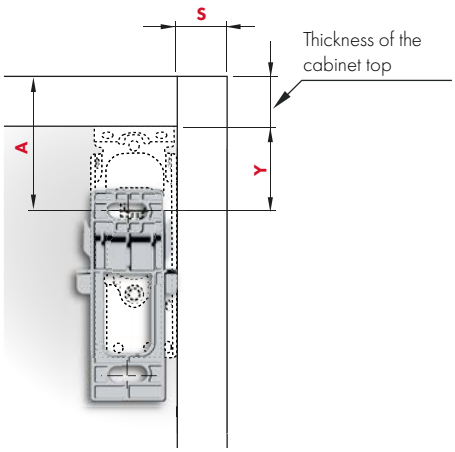

Libra hanger	Y (mm)
Libra H1	46
Libra H2	54
Libra H3	50
Libra H6	32
Libra H7	32

Libra H4

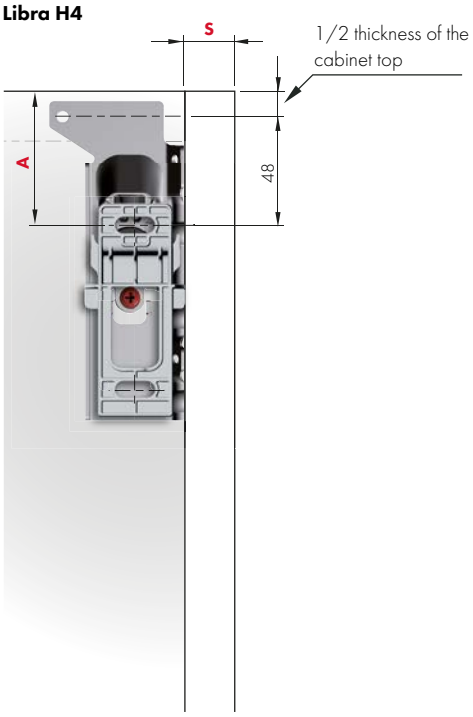

Libra H11

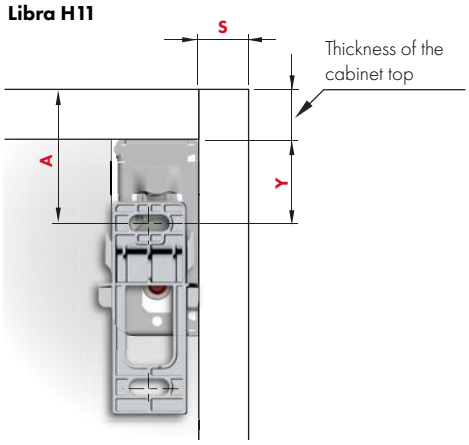

Drilling plan without cover



Y = 42

Drilling plan with cover



Y = 47,5

If S ≤ 19 mm position the plate in contact with the wall bar

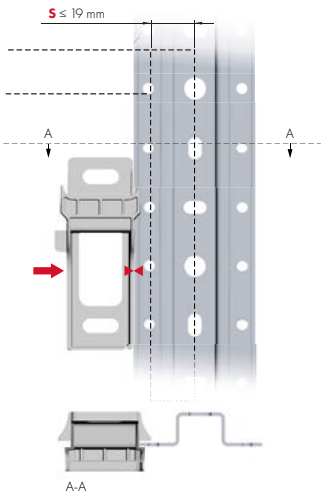

Make holes in the wall according to the red reference points indicated in the drawing.

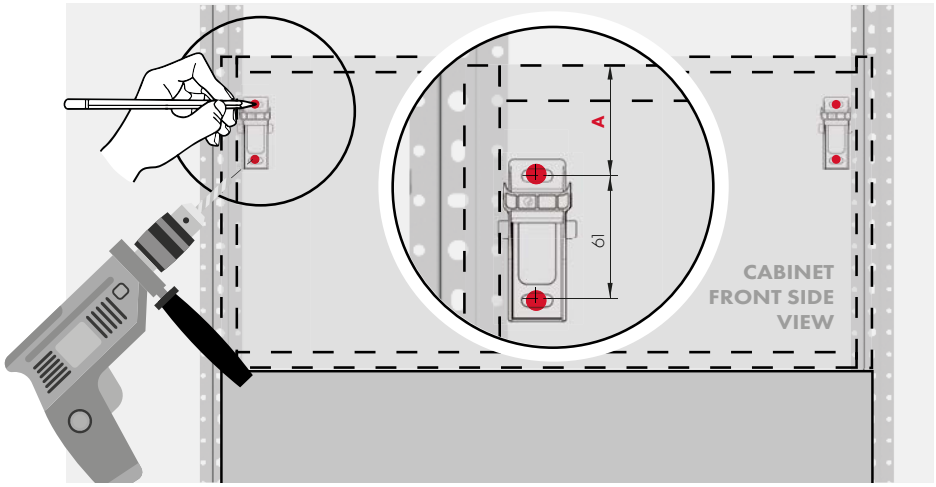

Back to contents

Wall plates fixing to the wall

Recommended flat washer outer Ø15mm , inner Ø5,3mm according ISO 7093.

Recommended Ø5mm pan head screw.

OK **NO**

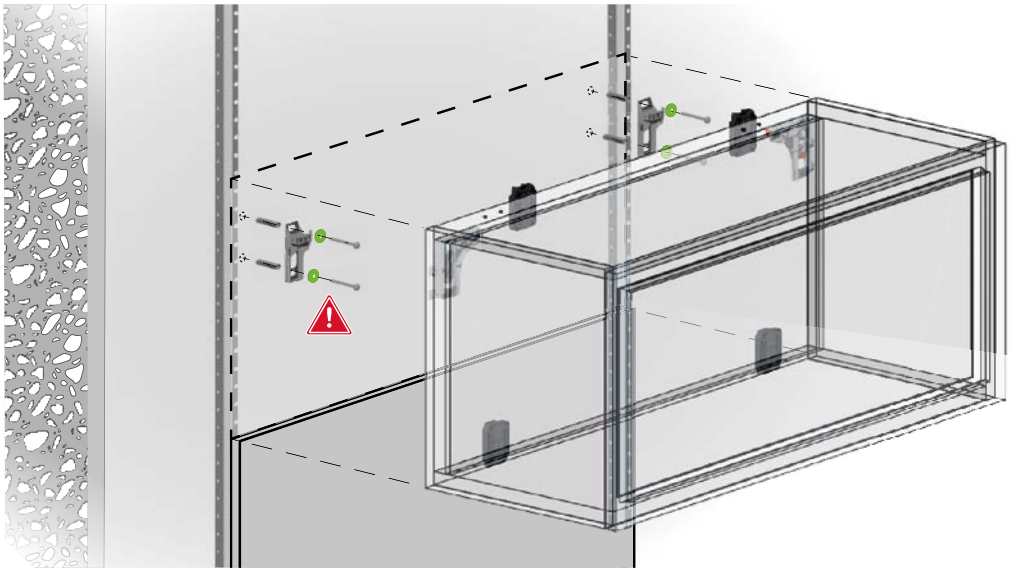

It is the responsibility of the customer:
- to ensure that the wall is of a suitable quality to hold the unit fixing in place.
- to use the proper hardware fittings according to the construction of the wall.

Installation and adjustments of the cabinet

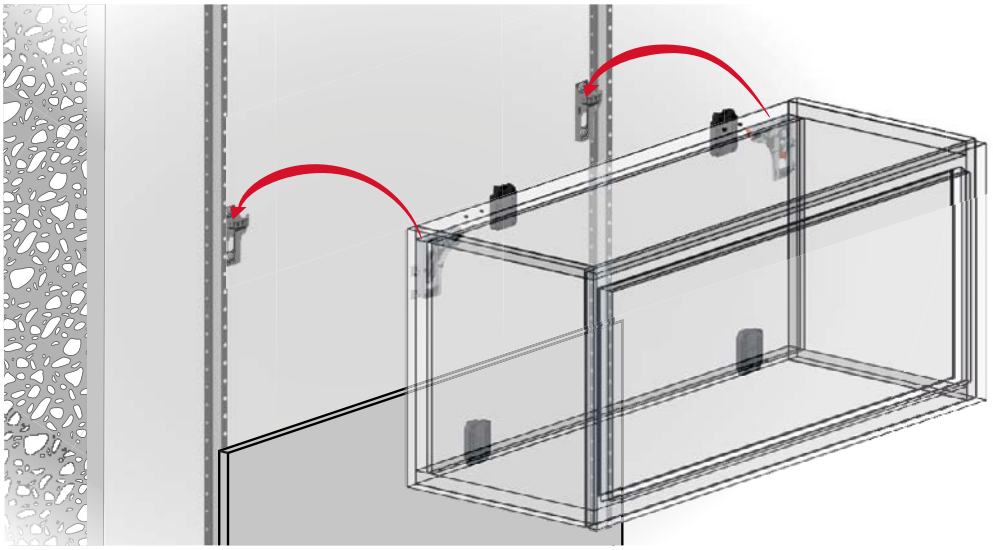

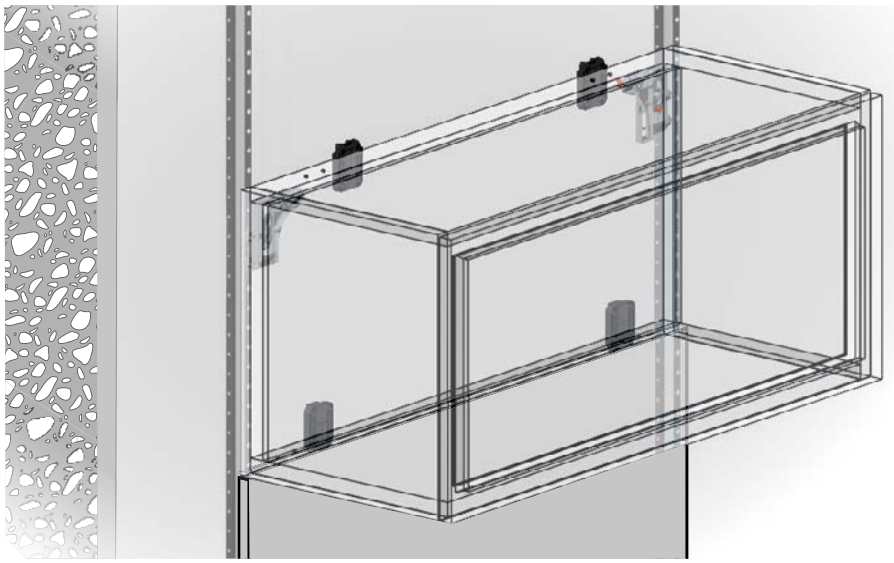



VERY IMPORTANT:

During cabinet adjustment, ensure that the weight of the unit is fully supported by the hangers, and not by any lower panels, if present.

Back to contents

PANEL HANGING BRACKETS

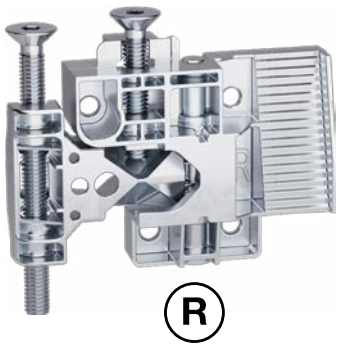

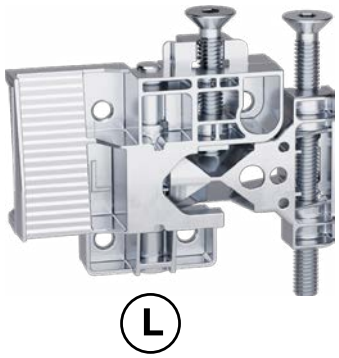

= S4

ST ZA

=50 pcs.

P2502434ZN	R
P2408184ZN	L

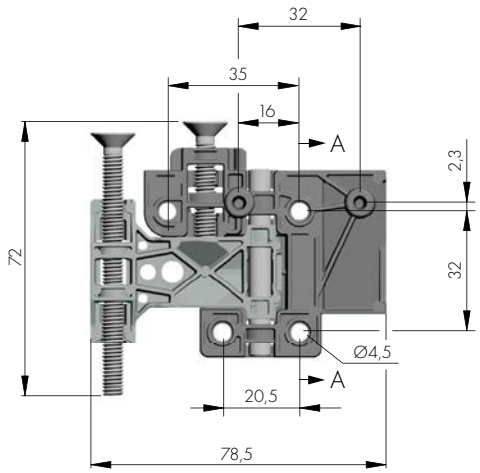

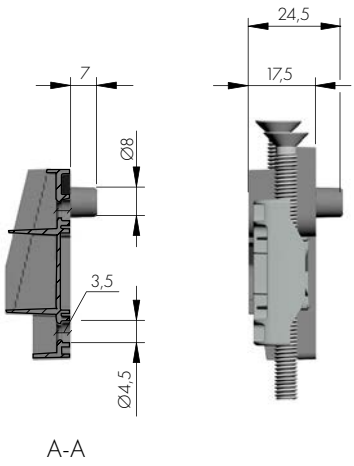

Multi-panel application

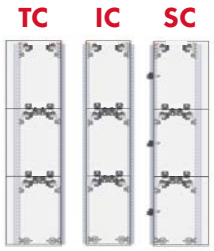

Full-size panel application





ADJUSTABLE AND HOLDING LEVELLER

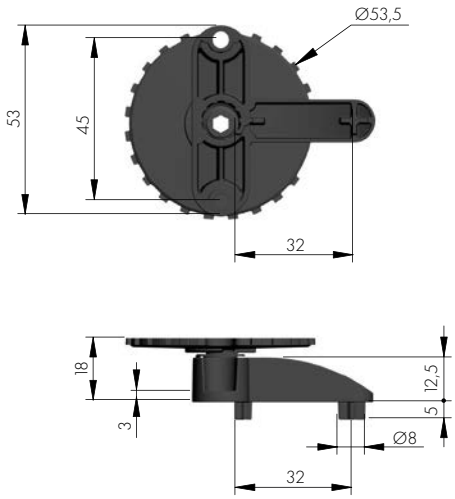

EP

=200 pcs.

63426100EA



Multi-panel application

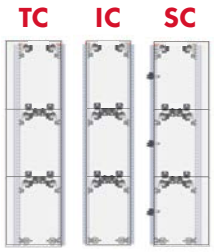

Full-size panel application

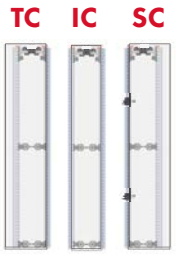

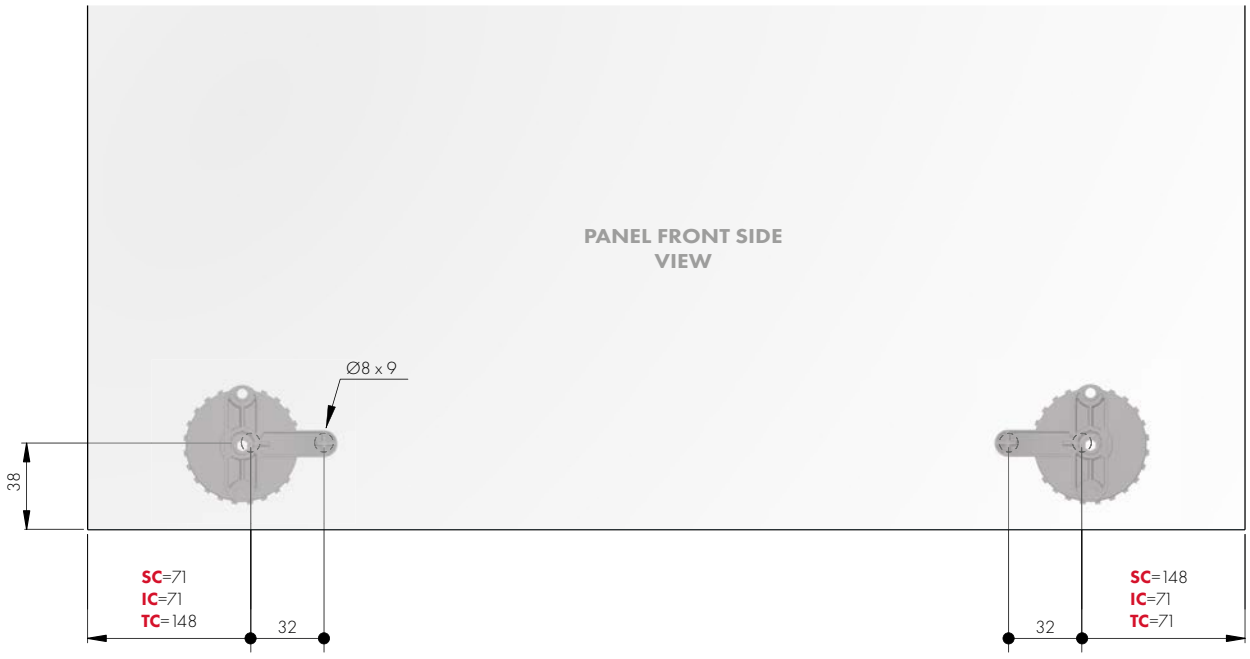

VERY IMPORTANT:

For additional adjustable leveller placement along panel height, refer to the chart on previous pages.

Back to contents

PANEL ALIGNMENT BRACKET

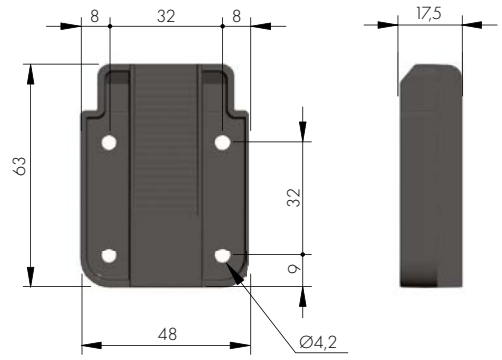

EP

=100 pcs.

63426040EA



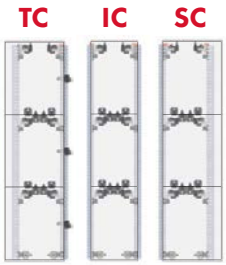

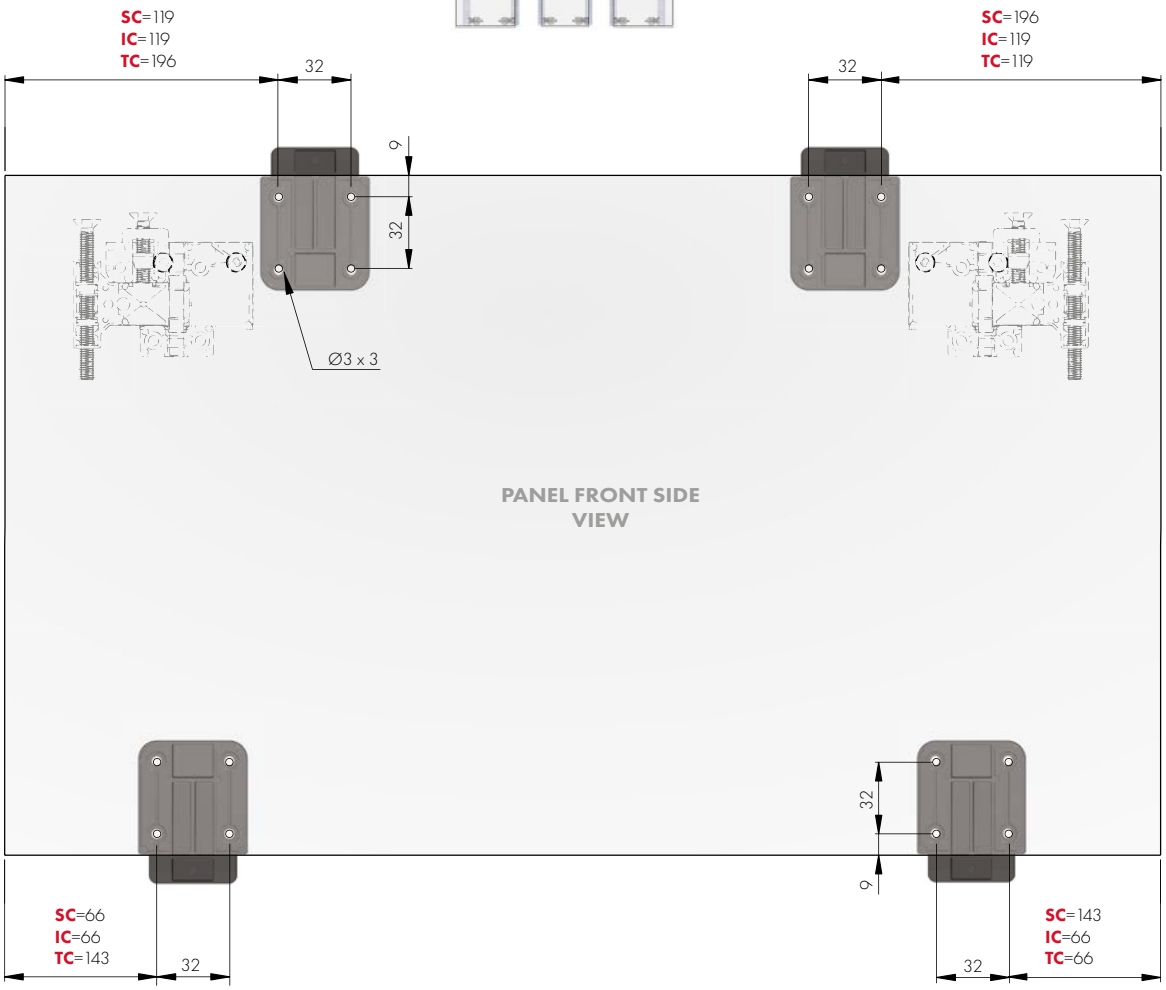

Back to contents

LATERAL SLIDING LOCKING ACCESSORY

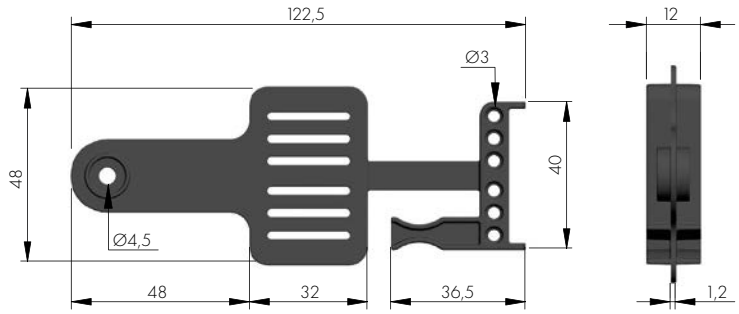

EP

=100 pcs.

63426050EA

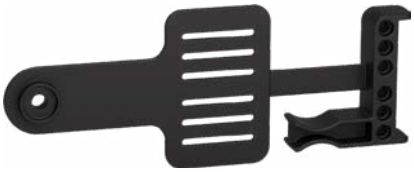

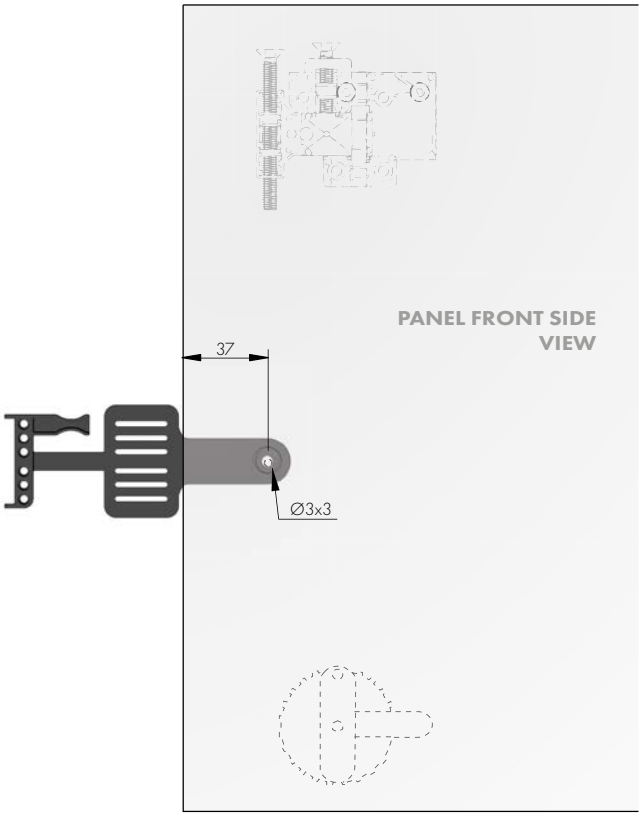

ANTI-TURNOVER SYSTEM FOR WALL BAR

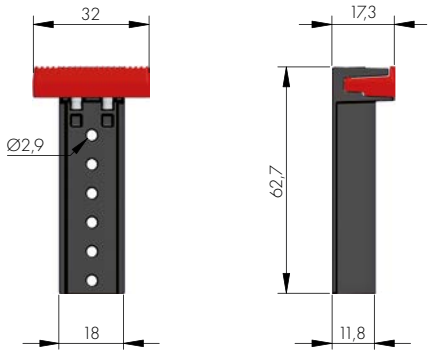

EP =200 pcs.

63426080EA



BRACKET FOR WALL BAR

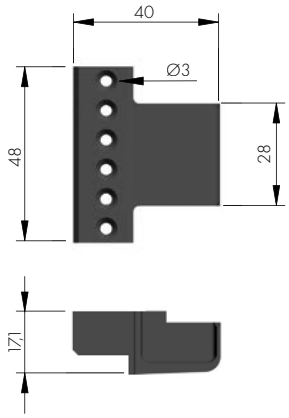

EP =200 pcs.

63426030EA



ADJUSTMENT LOCKING WEDGE

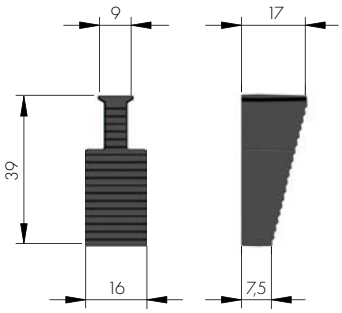



EP =500 pcs.

63426060EA

Back to contents

LIBRA WALL PLATE FOR SYMETRA

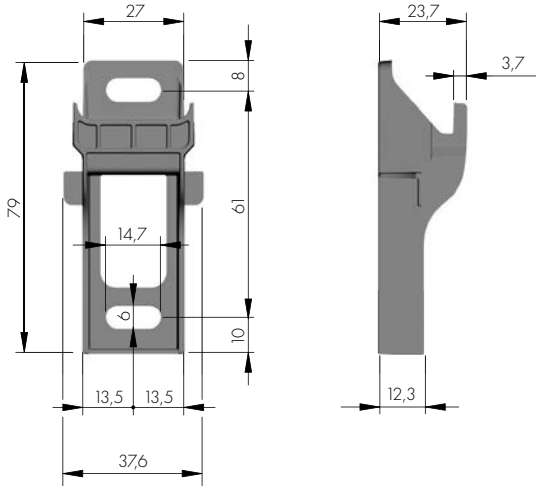

ZA

= on request

P2308248GR

VERY IMPORTANT: Recommended using **Ø5mm pan head screw and flat washer outer Ø15mm, inner Ø5,3mm, according ISO 7093**.



TEMPLATE FOR BRACKET POSITIONING

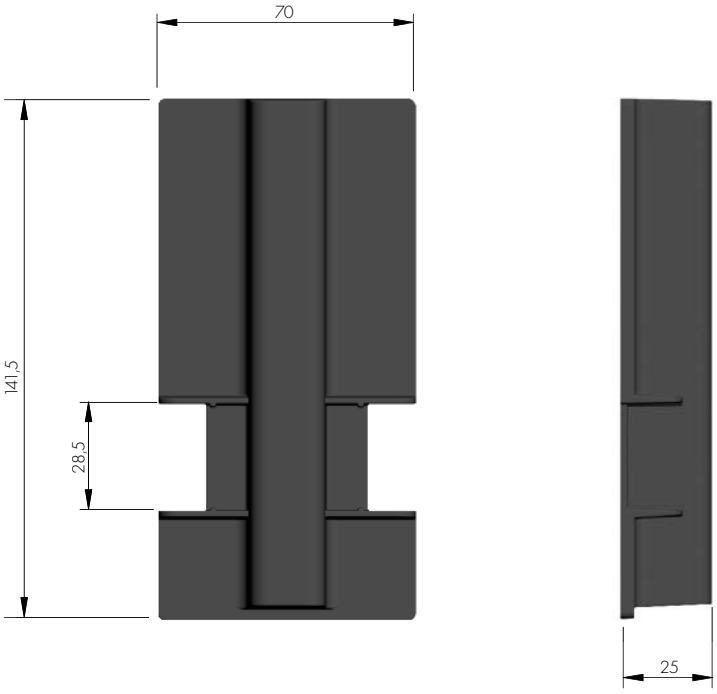

EP

=25 pcs.

63426110EA



LIBRA WALL BAR FOR SYMETRA

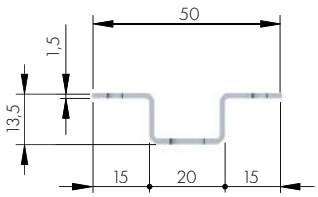

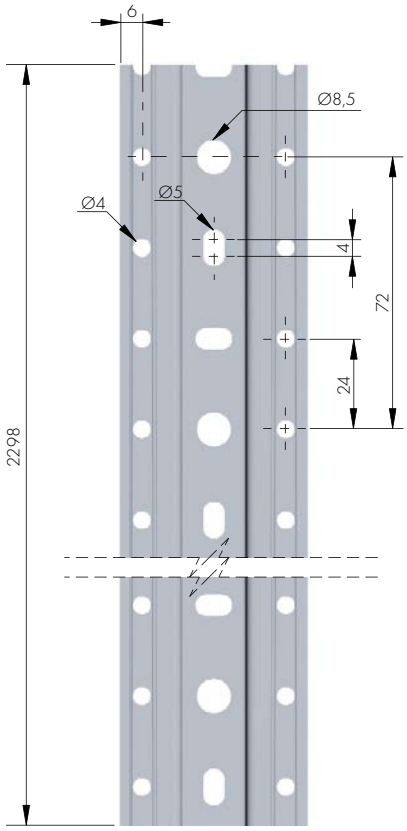

Fe = 5 pcs.

63426820Z0	



FIXING ACCESSORIES FOR ADJUSTABLE LEVELLER AND PANEL HANGING BRACKET

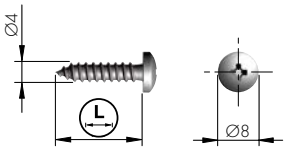



= PZ2

ST = on request

60103260ZN	18	18 min.
60103250ZN	16	15 min.
60103240ZN	12	12 min.

Back to contents

CLIP FOR FILLER PROFILE

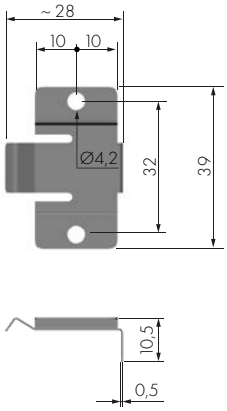

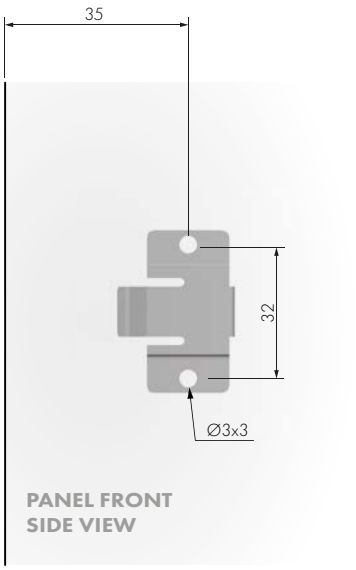

Fe

=50 pcs.

63426140Z0



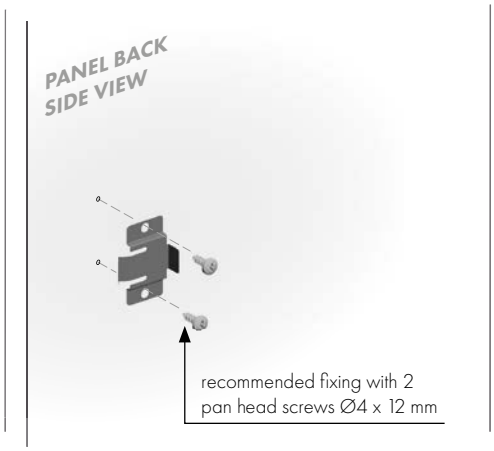

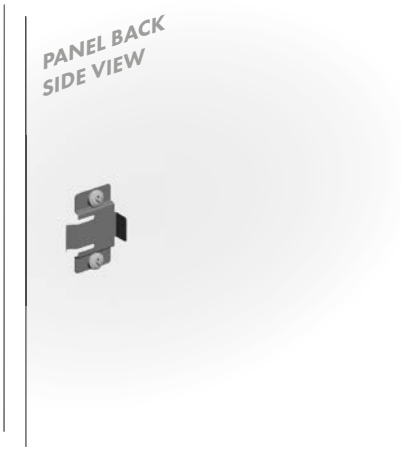

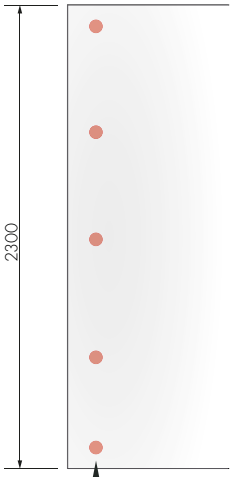

for fillers / led profiles with a height of 2300 mm, the
application of 5 clips is recommended.

FIXING ACCESSORY FOR CLIP

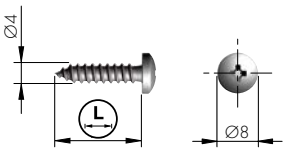



= PZ2

ST

= on request

60103240ZN	12	12 min.

Back to contents

FILLER PROFILE

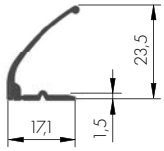

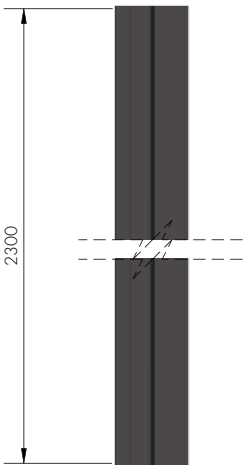

SR EP = 30 pcs.

63426150EA



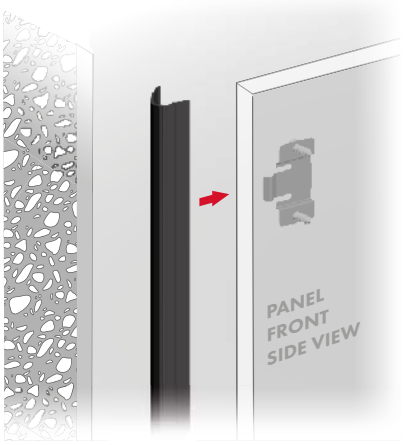

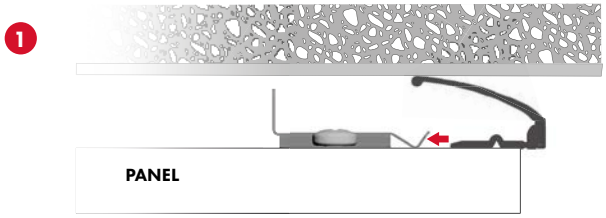

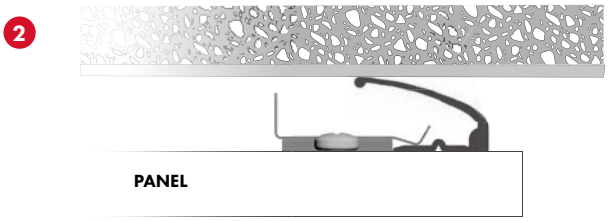

Clips allow the side LED profiles to be fixed to the composition.
(LED profiles not supplied)

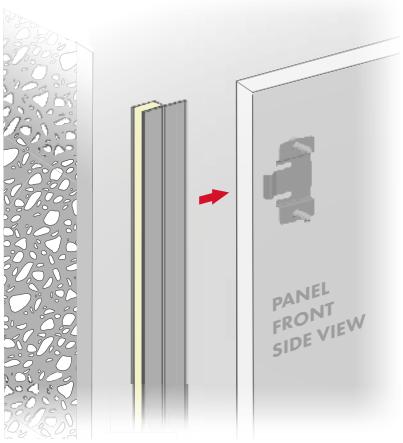

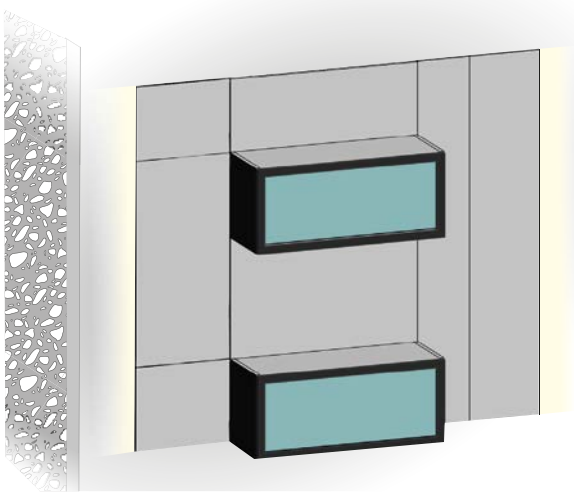

Back to contents

SYMBOLS AND FINISHES LEGEND

SYMBOLS

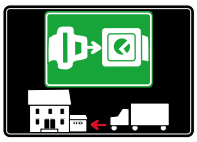

= SHELF SAFELY LOCKED DURING TRANSPORTATION AND AT HOME.



= ANTI-TURNOVER LOCKING SYSTEM

= NORMS / PATENTS

= PART NO.

= PCS. PER PACKAGE

= CAPACITY LOADING

= WOOD / GLASS THICKNESS

= HOLE DIAMETER

= DIAMETER

= LENGTH

= HEIGHT

= RIGHT VERSION

= LEFT VERSION

= SETTING CODE

= PCS. PER PAD

= CUT ON REQUEST

= SELF ADHESIVE

= PHILLIPS / POZIDRIV

= BLADE SLOT

= COMBI SLOT

= HEXAGONAL SOCKET

= HEXALOBULAR SOCKET

= COUNTERSUNK HEAD

= PAN HEAD

= FLANGE HEAD

= FLAT HEAD

= TRILOBULAR SCREW

= SELF-TAPPING SCREW

= EURO THREAD

= METRIC THREAD

= PRE-INSERTED SCREW

= PRE-INSERTED SCREW AND SPREADING BUSH

= WITH BUFFER

= WITH MAGNET

= NEWTON

= FRICTION

= AUTOMATIC

= DROP DOWN

= STANDARD HINGE

= KIMANA HINGE

= FLAP HINGE

= WITH SPRING

= WITHOUT SPRING

= REVERSED SPRING

= WITH FLANGE

NOTE: Printing errors and omissions may exist despite our best efforts to ensure accurancy. We reserve the right to alter specifications without notice.

Back to contents

MATERIALS

- ZA = Zinc Alloy
- ST = Steel
- HSS = High Speed Steel
- BR = Brass
- ABS = Acrylonitrile Butadiene Styrene
- TPU = Thermoplastic Polyurethane
- ZAnk = Nickel-plated Zinc Alloy
- STzk = Zinc-plated Steel
- AL = Aluminium
- WD = Wood
- EVA = Ethylene Vinyl Acetate

EP = ENGINEERING PLASTIC + EP = other engineering plastic available on request

SR = SOFT RUBBER + SR = other soft rubber available on request

- EPn = Natural Engineering Plastic
- EPc = Clear Engineering Plastic
- EPw = White Engineering Plastic
- EPg = Grey Engineering Plastic
- EPb = Black Engineering Plastic
- EPa = Anthracite Engineering Plastic

- SRn = Natural Soft Rubber
- SRw = White Soft Rubber
- SRb = Black Soft Rubber

FINISHES

+ = OTHER FINISHES AVAILABLE ON REQUEST

PART NO.	FINISHES	PART NO.	FINISHES	PART NO.	FINISHES
00	Insignificant finish	IA	Grey	XD	Satin-finished Steel
AA	Natural	IF	Grey 7	XE	Inox
AB	White	IJ	Light Grey	YA	Nickel-plated
AE	White 9010	IL	Grey 20	YC	Matt Nickel-plated
EA	Black	IN	Grey met. 26	YD	Satin-finished Nickel-plated
EC	Matt Black	JG	Aluminium 5	YQ	Black Nickel
EE	Anthracite	JL	Aluminium PE 11	Z9	Black Zinc
EW	Grey 9007	JM	Aluminium RAL 9006	ZN	Zinc-plated
FQ	Beige 42	KB	Bright Chrome	ZQ	Bright Gold
FU	Gunmetal	KC	Matt Chrome	ZZ	Clear/Transparent
FV	Gunmetal V52	LD	Brown 8019		
GR	Zamak Raw	RO	Red		
HA	Brass-Plated	UT	T-Met 9007		
HH	Tropicalized	UZ	T-Met		
HL	Raw Brass	WA	Bronzed		
HX	Graphite	WI	Burnished		

Back to contents

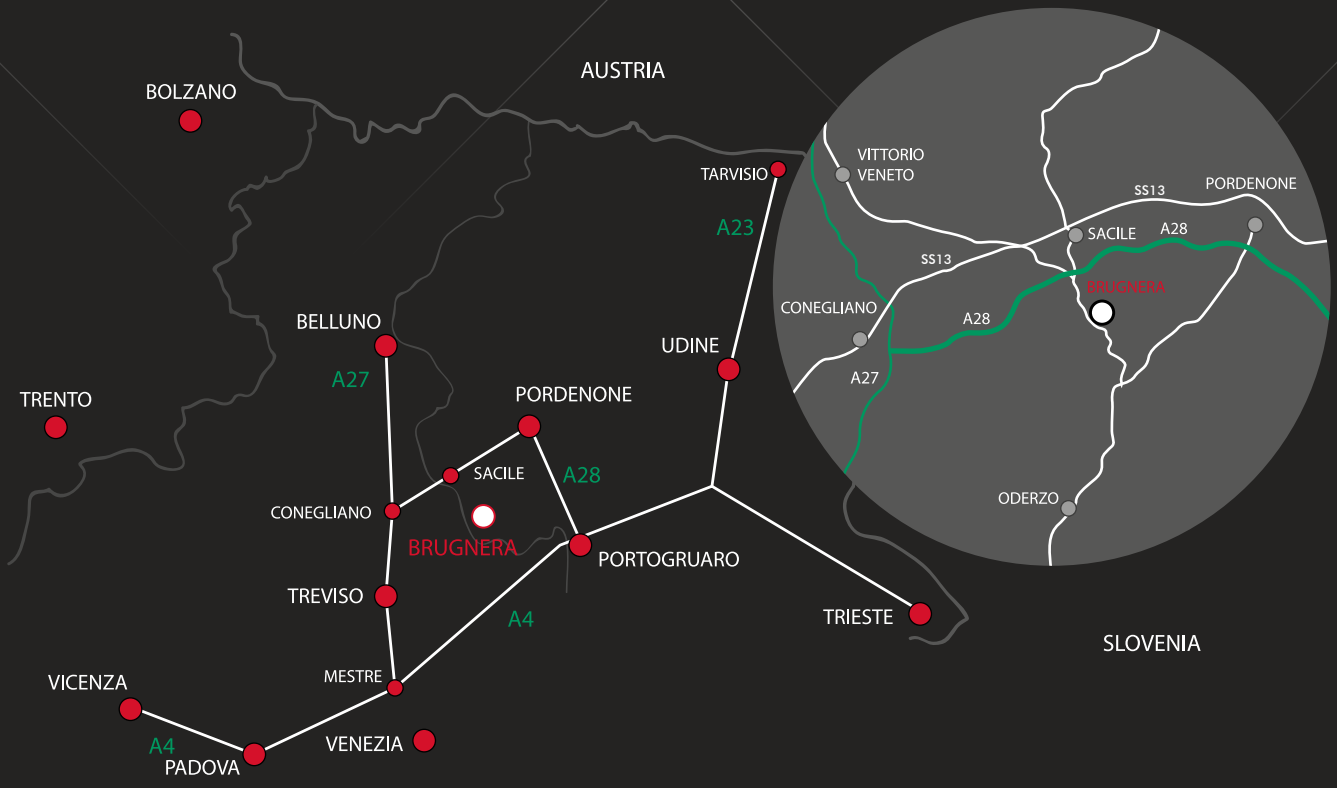

www.italianaferramenta.com

ITALIANA FERRAMENTA SRL - Viale Europa 17 I - 33070 Brugnera (PN)
Tel. +39 0434 428211 Fax +39 0434 428242 E-mail: info@italianaferramenta.it