DTC
Global Quality Benchmark



DOUBLE-WALL DRAWER SYSTEMS

MAGIC-STAR PLUS

The Metal Straight-sided Slim Drawer

A Perfect Mix of Function and Elegance





- Linear slim drawer sides - a fashion look and elegant appearance
- Perfect connection between components makes a beautiful drawer



Quietness Intelligence Durability Eco- Friendliness

MAGIC-STAR PLUS

HD12 Series Straight-sided Drawer System
(Medium Drawer: K Height)

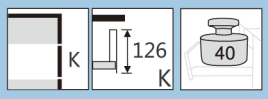

PRODUCT



DESCRIPTION

- Concealed, full extension
- Load capacity: 40kg
- Tool free assembly and removal of drawer
- Silent system guarantees smooth run without noise
- 3D adjustment:
  Up & down adjustment:±2mm
  left & right adjustment:±1.5mm
  tilt adjustment:+1.5mm,-2.5mm
- Finish: Silk white(E29), Grey matt(E30)

SPACE REQUIREMENT

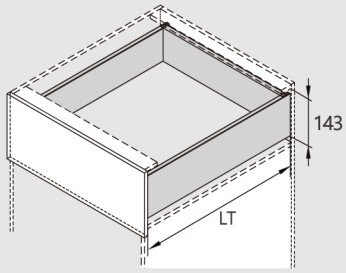

LT=Internal Cabinet Depth
LT=NL+3

MEDIUM DRAWER FOR WOOD DRAWER BACK

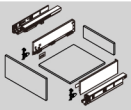

Kit Package

Silk White(E29)! Grey Matt(E30)!

NL	Soft Close item No.	Push-open item No.	Set/ctn
270mm	HD12270A17X	HD42270A17X	1
300mm	HD12300A17X	HD42300A17X	1
350mm	HD12350A17X	HD42350A17X	1
400mm	HD12400A17X	HD42400A17X	1
450mm	HD12450A17X	HD42450A17X	1
500mm	HD12500A17X	HD42500A17X	1
550mm	HD12550A17X	HD42550A17X	1
600mm	HD12600A17X	HD42600A17X	1

1

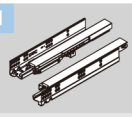

Slides (left/right) /Industrial Package

Pre-zinc Steel(F02)

NL	Soft Close item No.	Push-open item No.	Set/ctn
270mm	HD10270H	HD40270H	5
300mm	HD10300H	HD40300H	5
350mm	HD10350H	HD40350H	5
400mm	HD10400H	HD40400H	5
450mm	HD10450H	HD40450H	5
500mm	HD10500H	HD40500H	5
550mm	HD10550H	HD40550H	5
600mm	HD10600H	HD40600H	5

2

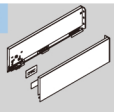

Drawer Sides and Cover Caps (left/right) /Industrial Package

Silk White(E29)! Grey Matt(E30)!

NL	Item No.	Set/ctn
270mm	HE122707X	5
300mm	HE123007X	5
350mm	HE123507X	5
400mm	HE124007X	5
450mm	HE124507X	5
500mm	HE125007X	5
550mm	HE125507X	5
600mm	HE126007X	5

3



Front Fixing-brackets (left/right) / Industrial Package

Pre-zinc Steel(F02)

	Item No.	Set/ctn
Screw-on	HE12011X	120
Press-in	HE12016X	120

30



Rod for Push-open Synchronization / Industrial Package
Size:1100mm.Cutting:Internal cabinet width LW-172
for Nominal Side Length: 350mm、400mm、450mm、500mm、550mm、600mm

Item No.	HT0FH02
Set/ctn	60

4



Fixing-brackets

Zinc plated(B04)

Item No.	HT10082
Pcs/ctn	400

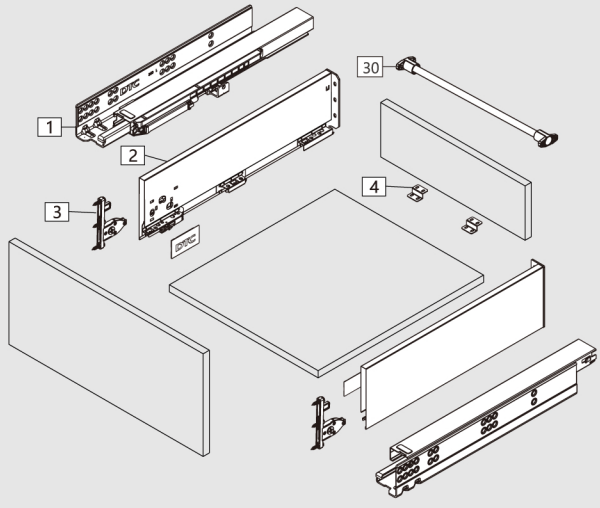

Rod for push-open synchronization not included in the kit

PLANNING

Installation Dimensions(mm)

NL=Nominal Slide Length
LT=Internal Cabinet Depth
LT=NL+3

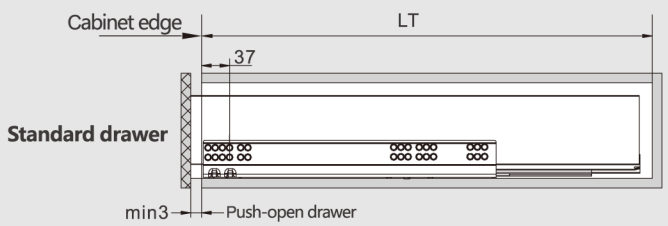

Cabinet Configuration

Cabinet widths/KB(mm)	Push-open drawer Synchronization rod
300	○
350	○
400	○
450	○
500	○
600	○
800	●
900	●
1000	●
1200	●

○ recommended
● strongly recommended

Screw Positions of the Slides(mm)

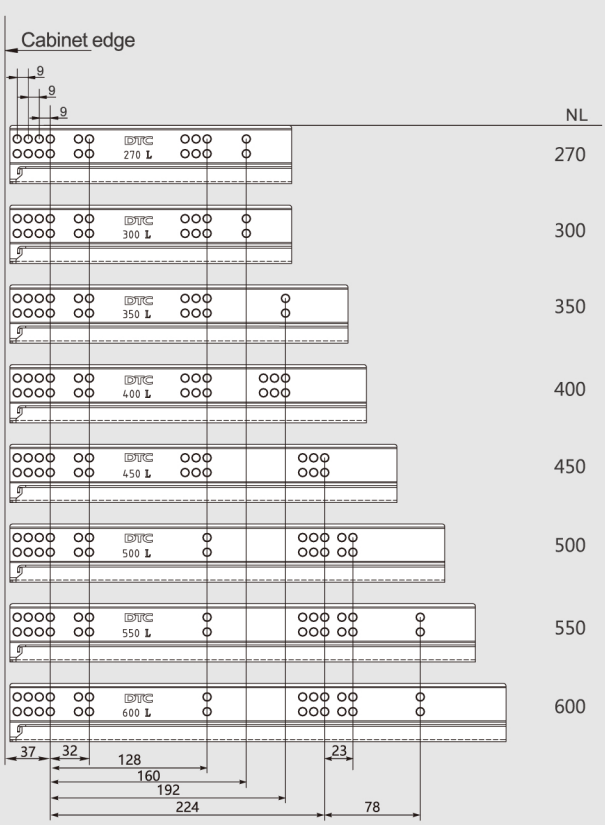

Installation Dimensions(mm)

LW=Internal Cabinet Width

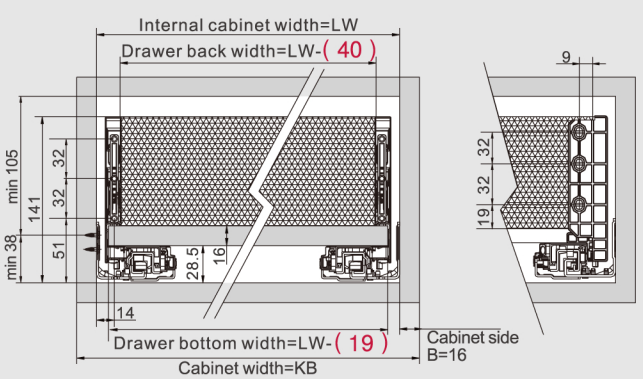

Drawer Front, Back and Bottom Dimensions(mm)

Drawer front

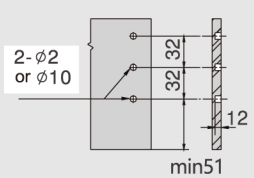

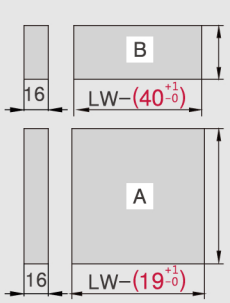

Back
101mm

Bottom
NL–(29 -0 -1) mm

KB Cabinet width
LW Internal cabinet width
NL Nominal length

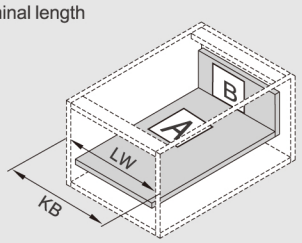

ASSEMBLY AND ADJUSTMENT

Assembly and Adjustment(for MAGIC-STAR PLUS)

Drawer Assembly

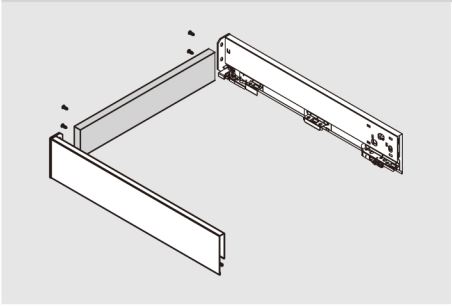

Back assembly

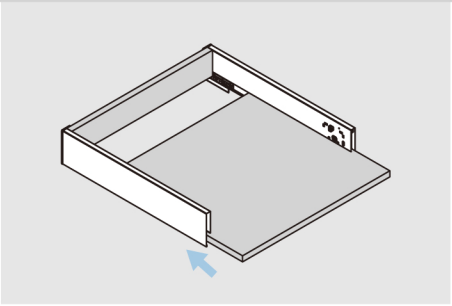

Bottom assembly

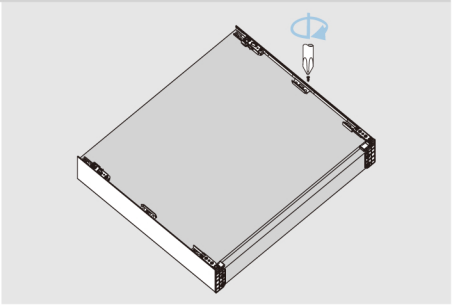

Fix screws

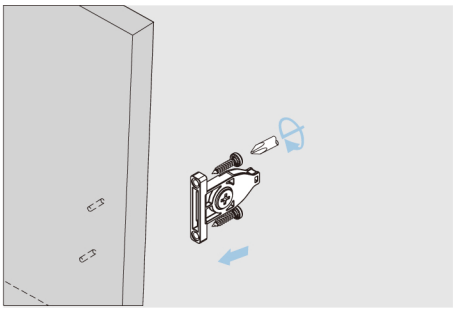

Front assembly

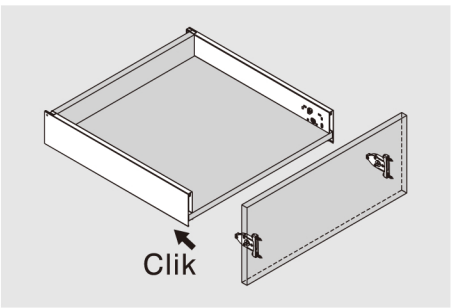

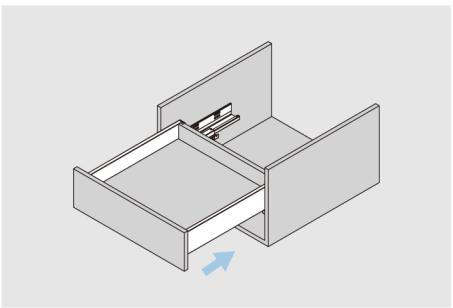

Slide into the cabinet

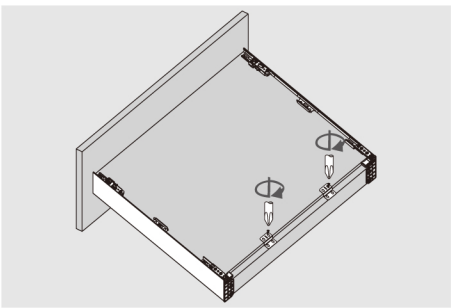

Fixing-brackets assembly

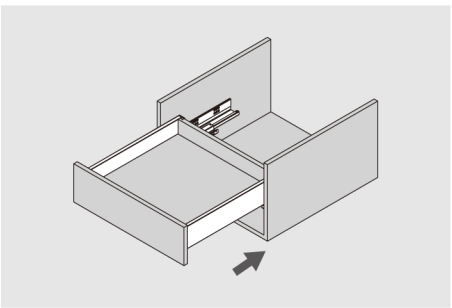

Slide into the cabinet

Adjustments for Lower/Medium Drawer(M/K Height)

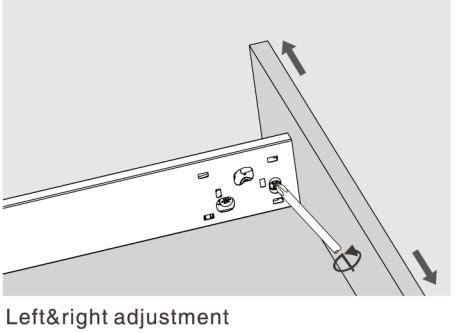

Left&right adjustment

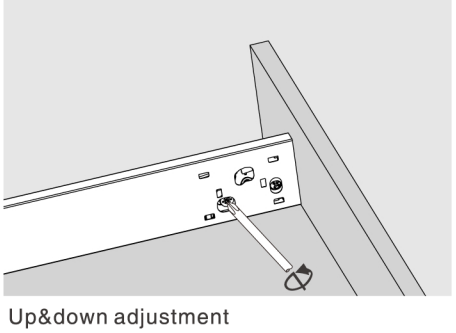

Up&down adjustment

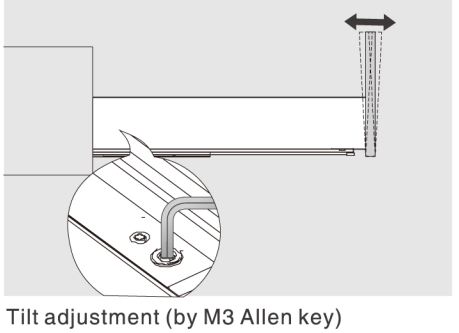

Tilt adjustment (by M3 Allen key)

Removal for Lower/Medium Drawer(M/K Height)

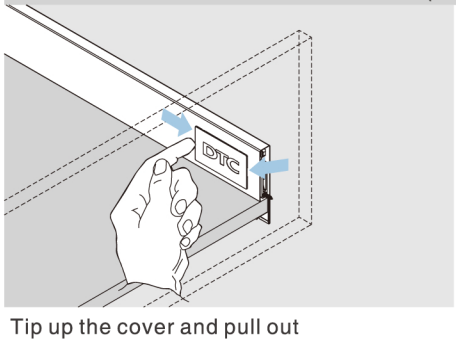

Tip up the cover and pull out

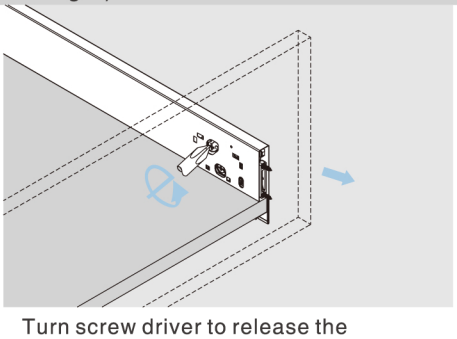

Turn screw driver to release the drawer front

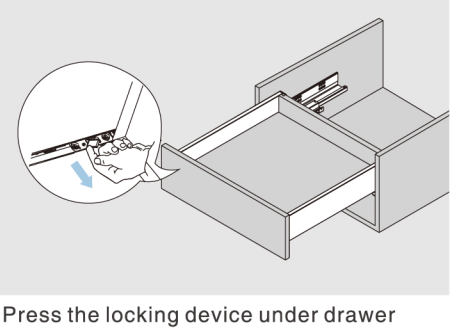

Press the locking device under drawer bottom and pull out the drawer

Adjustments for High Drawer/Super High Drawer (C/F Height)

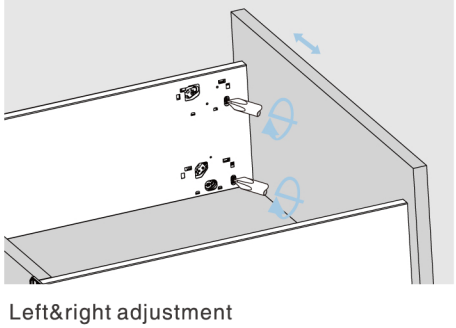

Left&right adjustment

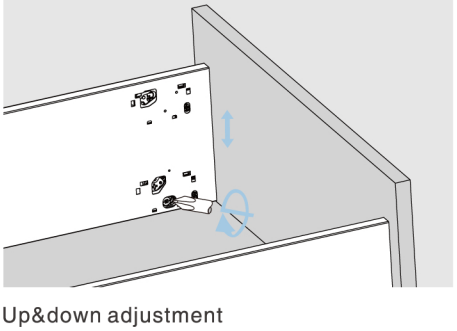

Up&down adjustment

Removal of High Drawer/Super High Drawer (C/F Height)

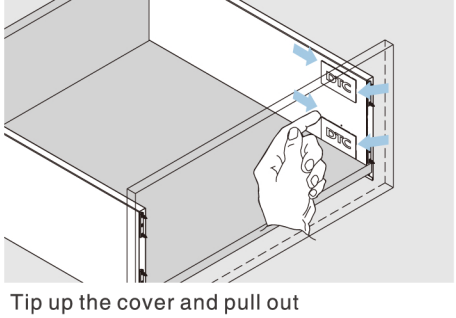

Tip up the cover and pull out

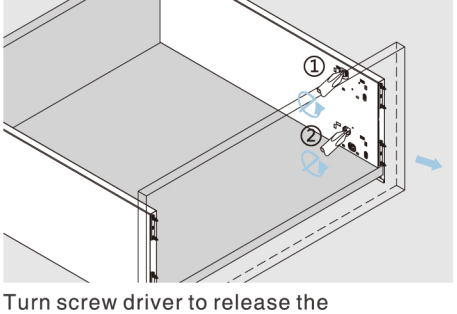

Turn screw driver to release the drawer front

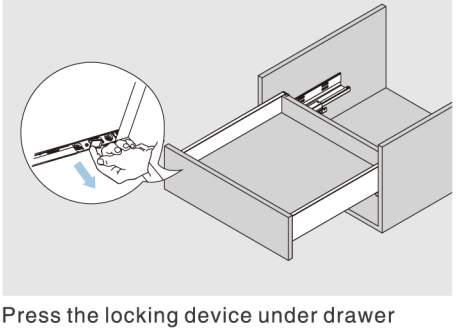

Press the locking device under drawer bottom and pull out the drawer