TRACK-PRO

CS Series Soft-close Sliding Door System

DTC
Global Quality Benchmark

PRODUCT



DESCRIPTION

- Gentle and smooth door opening and closing thanks to patented damper design
- Effective catching mechanism prevents door disengagement
- Double-roller devise on damper trigger provides smooth and stable movement and avoids roller disengagement
- Stepless adjustment(35-39mm) on guiding rollers interval
- Bottom roller adjustment range:0-12mm
- Damper trigger height adjustment up to 6mm

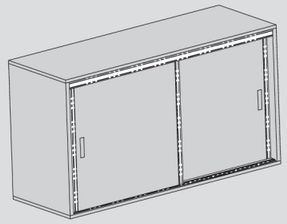

CS TWO-WAY SOFT-CLOSE, INVISIBLE BOTTOM ROLLER, FOR ALUMINUM FRAME DOOR

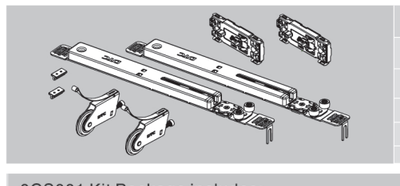

Kit Package

Door Weight(KG)	Item No.	Set/ctn
5~15	**0CS001A**	10
15~30	**0CS001B**	10
30~50	**0CS001C**	10

0CS001 Kit Package includes:



2 x damper

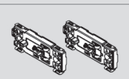

2 x damper trigger

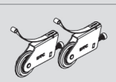

2 x bottom roller



2 x dowel

1 

Damper (for Alu Door) / Industrial package

Door Weight(KG)	Item No.	Pcs/ctn
5~15	**CSHCA1**	100
15~30	**CSHCA2**	100
30~50	**CSHCA3**	100

2 

Damper trigger / Industrial package

Item No.	Pcs/ctn
CSBDA	200

3 

Bottom Roller / Industrial package

Item No.	Pcs/ctn
CSXLA	100

4 

Dowel / Industrial package

Item No.	Pcs/ctn
CSXW01	5000

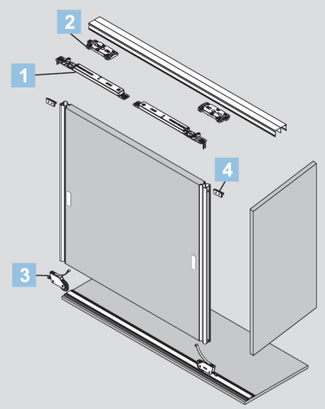

PLANNING

Sliding Door Installation Dimensions(mm)

H=wardrobe internal height
h=door height
LT=wardrobe internal depth
T=door thickness
Wardrobe internal depth: LT=97(min)
Door height:h=H-43 $^{0}_{-3}$

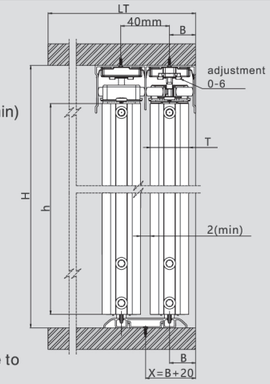

Distance from door bottom frame to bottom track surface:1.5~13.5

Damper Trigger Installation Dimensions(mm)

A=Distance from vertical door frame to head of damper
S=Damper trigger fixing position S=A+127

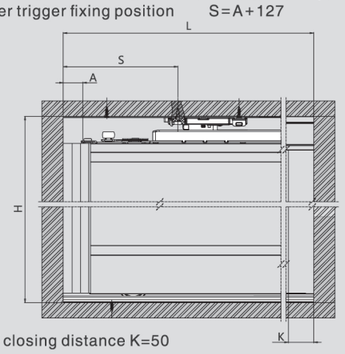

Door self closing distance K=50

Sliding Door Installation Dimensions(mm)

W=door width
W=L/2+15
L=wardrobe internal width

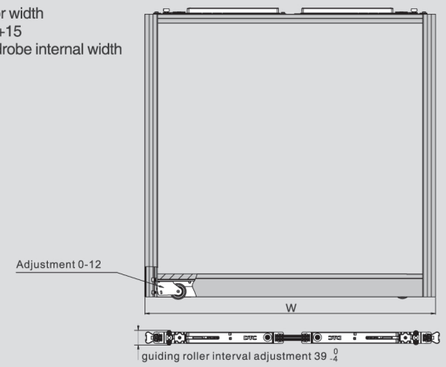

Top Track Installation Dimensions(mm)

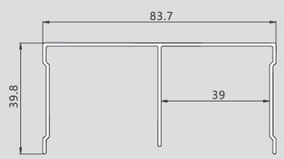

Top Track / Industrial package
Silver white(F98)

Item No.	Pcs/ctn
CSDG01	5

Length: 6meters

Bottom Track Installation Dimensions(mm)

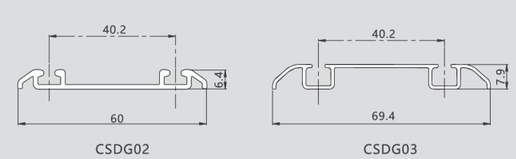

Bottom Track / Industrial package
Silver white(F98)

Item No.	Pcs/ctn
CSDG02	10
CSDG03	10

Length: 6meters

SLIDING DOOR SYSTEM