

Diva Fluid

New Patented sliding system equipped with next generation Fluid soft-closing technology

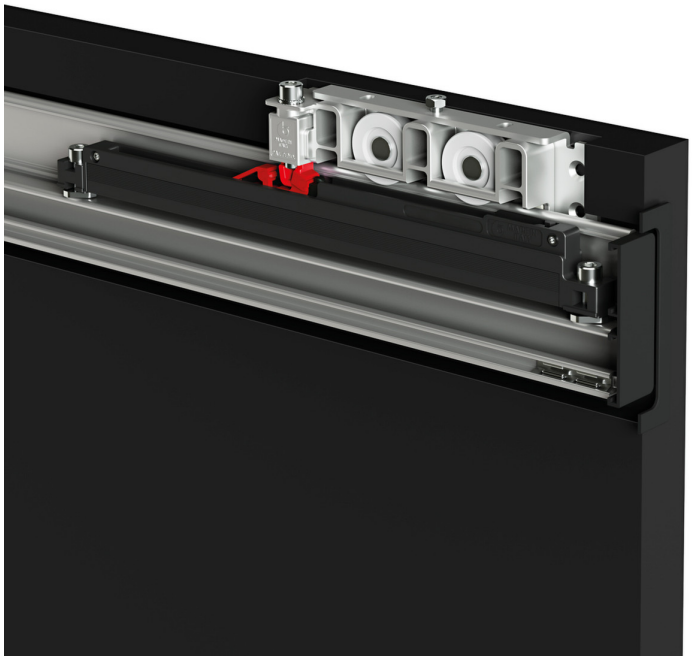

↔	600 ÷ 1500 mm
	Max 80 kg
↕	10 mm
	Fermi standard

Diva Fluid

Diva Fluid is the new patented sliding system dedicated to design doors, shaped by exposed aluminium tracks and Fluid next generation soft-closing technology.

Diva Fluid is feautured by minimal style thanks to optimized sliding trolleys built-in the door with a totally updated milling pattern, meanhwile Patented Fluid dampers are totally concealed into the tracks in order to stand out the original design of the door.

The exposed aluminium sliding tracks are available in various modern finishing solutions according to latest architectural and aesthetical trends.

New Diva Fluid assembling process has been simplified thanks to new support jig, developed to guide installers step by step and to grant the best functionality possible of the system.

The new patented anti-jumping system allows to grant the maximal safety to all installers and end-users, avoiding the door to fall in any circumstance.

