DTC
Global Quality Benchmark

UNDERMOUNT
SLIDE SERIES

D-MOTION



Soft-close and silent system

A Smooth Drawer



- DTC D-motion undermount slide, silent and soft-close
- A complete program fitting a variety of applications with soft-close, push-open, locking device and pin mount options.
- Highly stable construction, verified durability

Quietness Intelligence Durability Eco- Friendliness

D-MOTION is a strong foundation for wood drawers with a smooth running action and a stable, comfortable feel.

DTC
Global Quality Benchmark

UNDERMOUNT SLIDE SERIES D-MOTION





Whatever the drawer size, D-MOTION produces a smooth running action.

Options are abundant: Locking devices or pin mount, 16-19mm drawer sides, soft-close or push-open and slide lengths for common applications. Virturally any cabinet or furniture situation can be accommodated.

DTC
Global Quality Benchmark

UNDERMOUNT SLIDE SERIES D-MOTION





The long stroke of the soft-close dampers ensures the closing action is smooth and silent.

D-MOTION

SS10 Series Full Extension Undermount Slides with Locking Device

35

PRODUCT



DESCRIPTION

- Load capacity: 35kg
- Finish: zinc plated
- Length: 250-600mm
- Full extension
- Tool free assembly and removal of drawer
- Silent system guarantees smooth run without noise
- Drawer up&down adjustment: 0~+3mm
- Maximum drawer side thickness:16mm

SPACE REQUIREMENT

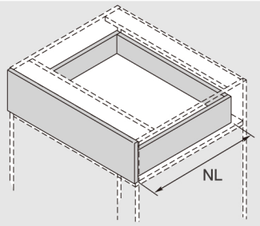

NL: Nominal Length

SOFT CLOSE DRAWER / PUSH-OPEN DRAWER

1



Slides (left/right)

Pre-zinc Steel (F02)

NL	Soft Close item No.	Set/ctn	Push-open item No.	Set/ctn
250mm	SS10250H	10	FF10250HX	6
270mm	SS10270H	10	FF10270HX	6
300mm	SS10300H	10	FF10300HX	6
350mm	SS10350H1	10	FF10350HX	6
400mm	SS10400H1	10	FF10400HX	6
450mm	SS10450H1	10	FF10450HX	6
500mm	SS10500H1	10	FF10500HX	6
550mm	SS10550H1	10	FF10550HX	6
600mm	SS10600H1	10	FF10600HX	6

2



Locking Device (left/right)

Grey(H11)

Item No. **0SSLD01-A**

3



Rod for Push-open Synchronization
/For cutting to size,1100mm.Cutting:Internal cabinet width LW-172

Item No. **HT0FH02**

Soft close drawer

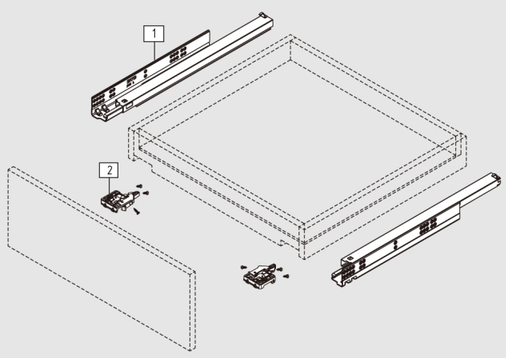

Push-open drawer

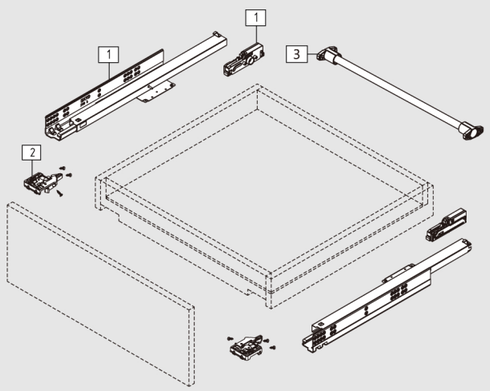

PLANNING

Installation Dimensions(mm)

NL=Nominal Slide Length LT=Internal Cabinet Depth LT=NL+3

Standard drawer

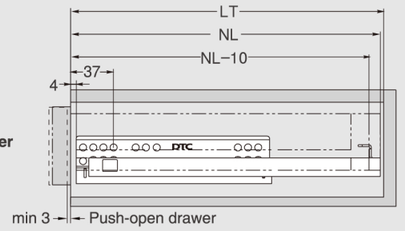

NL=Nominal Slide Length LT=Internal Cabinet Depth LT=NL+21

Inner drawer

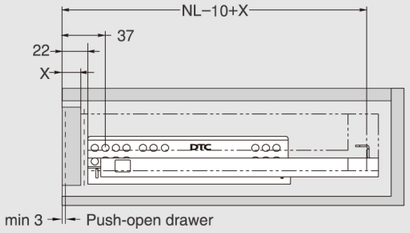

Fixing Hole Position for Inner Drawer(mm)

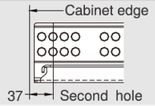

Screw Positions of the Slides(mm)

Installation Dimensions(mm)

SKW=Internal Drawer Width
LW=Internal Cabinet Width

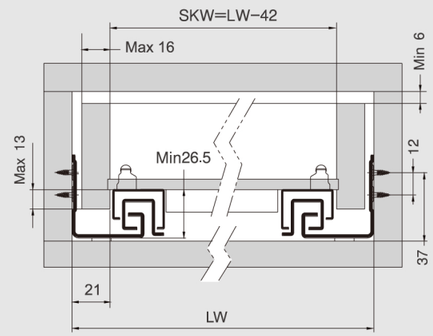

Drawer Back Preparation(mm)

Soft close drawer

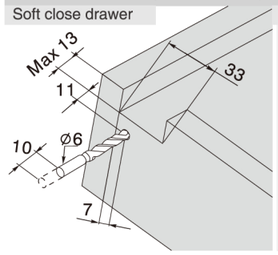

Push-open drawer

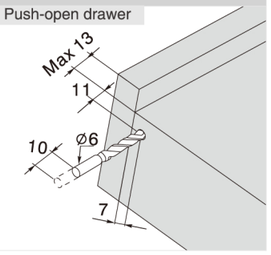

Locking Device Installation(mm)

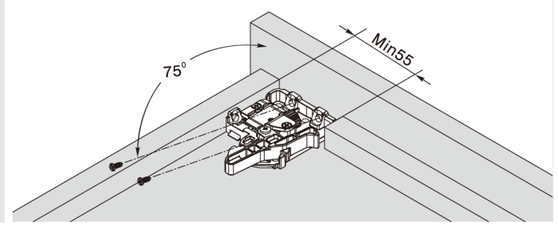

D-MOTION

SS80 Series Full Extension Undermount Slides with Locking Device

35

DTC
Global Quality Benchmark

PRODUCT



DESCRIPTION

- Load capacity: 35kg
- Finish: zinc plated
- Length: 250-600mm
- Full extension
- Tool free assembly and removal of drawer
- Silent system guarantees smooth run without noise
- Drawer up&down adjustment: 0~+3mm
- Maximum drawer side thickness:19mm

SPACE REQUIREMENT

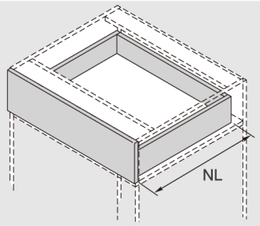

NL: Nominal Length

SOFT CLOSE DRAWER / PUSH-OPEN DRAWER

1



Slides (left/right)

Pre-zinc Steel (F02)

NL	Soft Close item No.	Set/ctn	Push-open item No.	Set/ctn
250mm	SS80250H	10	FF80250HX	6
270mm	SS80270H	10	FF80270HX	6
300mm	SS80300H	10	FF80300HX	6
350mm	SS80350H1	10	FF80350HX	6
400mm	SS80400H1	10	FF80400HX	6
450mm	SS80450H1	10	FF80450HX	6
500mm	SS80500H1	10	FF80500HX	6
550mm	SS80550H1	10	FF80550HX	6
600mm	SS80600H1	10	FF80600HX	6

2

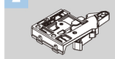

Locking Device (left/right)

Grey(H11)

Item No. 0SSLD01-A

3



Rod for Push-open Synchronization
/For cutting to size,1100mm.Cutting:Internal cabinet width LW-180

Item No. HT0FH02

Soft close drawer

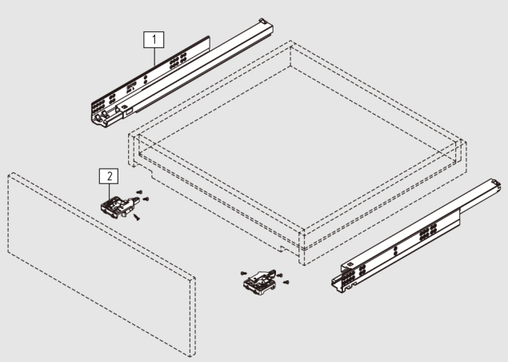

Push-open drawer

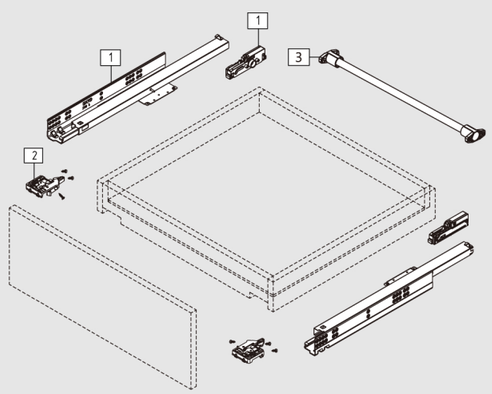

PLANNING

Installation Dimensions(mm)

NL=Nominal Slide Length LT=Internal Cabinet Depth LT=NL+3

Standard drawer

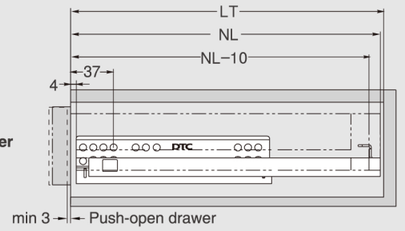

NL=Nominal Slide Length LT=Internal Cabinet Depth LT=NL+21

Inner drawer

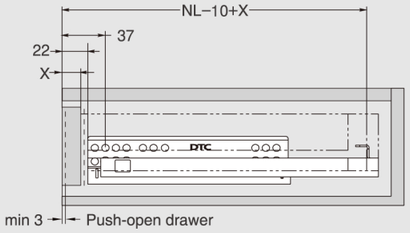

Fixing Hole Position for Inner Drawer(mm)

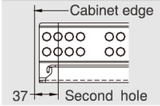

Screw Positions of the Slides(mm)

Installation Dimensions(mm)

SKW=Internal Drawer Width
LW=Internal Cabinet Width

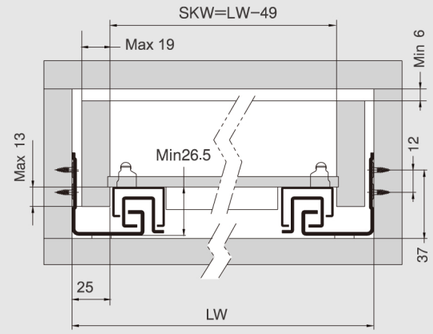

Drawer Back Preparation(mm)

Soft close drawer

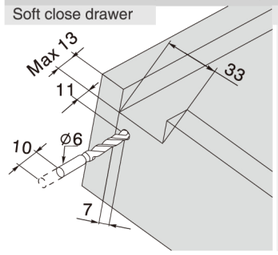

Push-open drawer

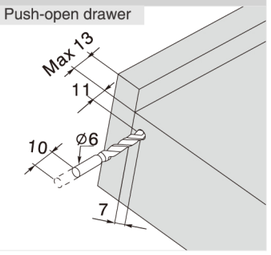

Locking Device Installation(mm)

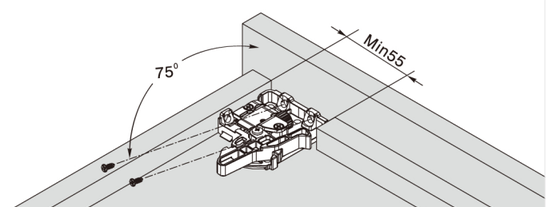

UNDERMOUNT SLIDE

D-MOTION

SS10C Series Full Extension Undermount Slides with Peg

DTC Global Quality Benchmark

PRODUCT



DESCRIPTION

- Load capacity: 35kg
- Finish: zinc plated
- Length: 250-600mm
- Full extension
- Tool free assembly and removal of drawer
- Silent system guarantees smooth run without noise
- Drawer up&down adjustment: 0~+4mm
- Maximum drawer side thickness:16mm

SPACE REQUIREMENT

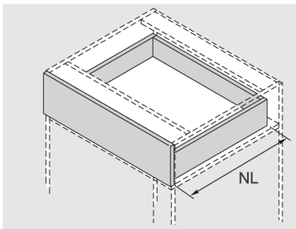

NL: Nominal Length

SOFT CLOSE DRAWER / PUSH-OPEN DRAWER

1 

Slides (left/right)

Pre-zinc Steel (F02)

NL	Soft Close item No.	Set/ctn	Push-open item No.	Set/ctn
250mm	SS10C250H	10	FF10C250HX	6
270mm	SS10C270H	10	FF10C270HX	6
300mm	SS10C300H	10	FF10C300HX	6
350mm	SS10C350H1	10	FF10C350HX	6
400mm	SS10C400H1	10	FF10C400HX	6
450mm	SS10C450H1	10	FF10C450HX	6
500mm	SS10C500H1	10	FF10C500HX	6
550mm	SS10C550H1	10	FF10C550HX	6
600mm	SS10C600H1	10	FF10C600HX	6

2 

Locking Pin

Grey(H11)

Item No. SJS01

3 

Rod for Push-open Synchronization
/For cutting to size,1100mm.Cutting:Internal cabinet width LW-172

Item No. HT0FH02

Soft close drawer

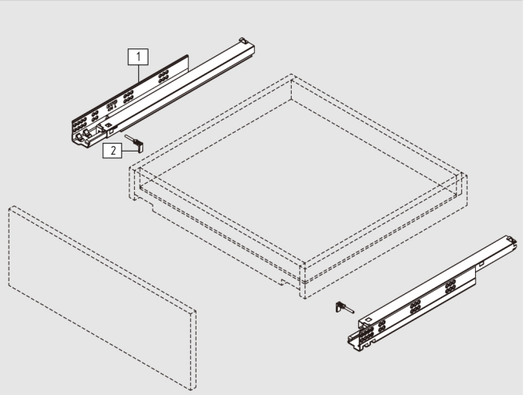

Push-open drawer

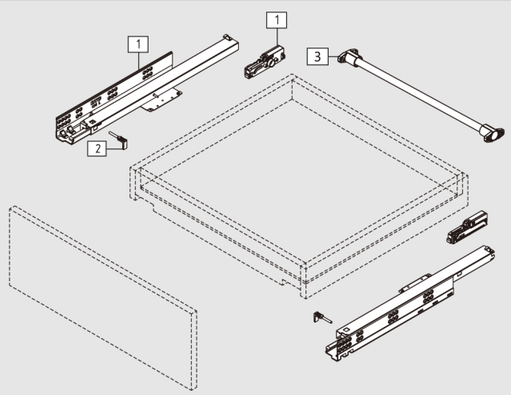

PLANNING

Installation Dimensions(mm)

NL=Nominal Slide Length LT=Internal Cabinet Depth LT=NL+3

Standard drawer

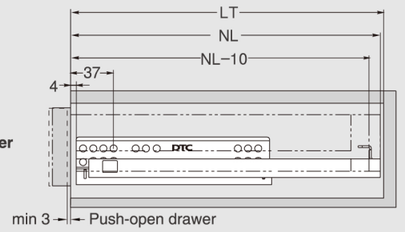

NL=Nominal Slide Length LT=Internal Cabinet Depth LT=NL+21

Inner drawer

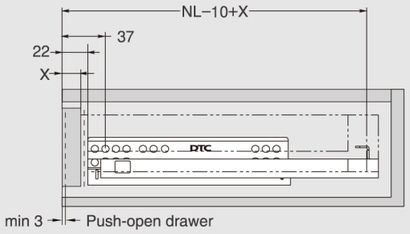

Fixing Hole Position for Inner Drawer(mm)

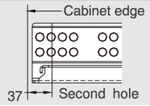

Screw Positions of the Slides(mm)

Installation Dimensions(mm)

SKW=Internal Drawer Width
LW=Internal Cabinet Width

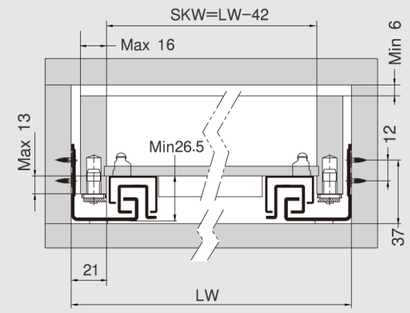

Drawer Back Preparation(mm)

Soft close drawer

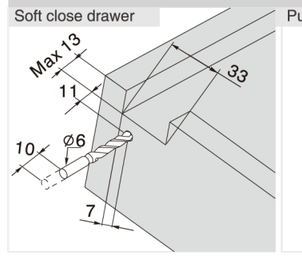

Push-open drawer

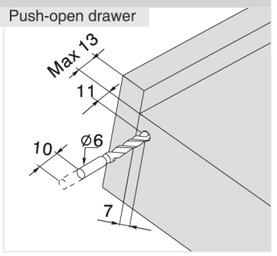

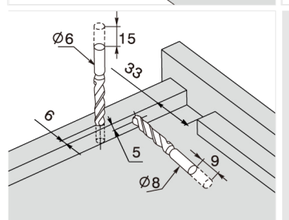

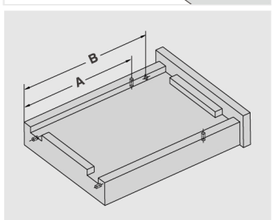

NL (mm)	250	270	300	350	400	450	500	550	600
A (mm)	190	205	245	270	305	330	355	390	415
B (mm)	200.5	215.5	255.5	280.5	319.5	369.5	419.5	469.5	519.5

D-MOTION

SS80C Series Full Extension Undermount Slides with Peg

DTC Global Quality Benchmark

PRODUCT



DESCRIPTION

- Load capacity: 35kg
- Finish: zinc plated
- Length: 250-600mm
- Full extension
- Tool free assembly and removal of drawer
- Silent system guarantees smooth run without noise
- Drawer up&down adjustment: 0~+4mm
- Maximum drawer side thickness:19mm

SPACE REQUIREMENT

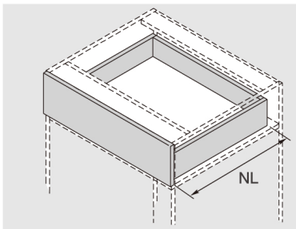

NL: Nominal Length

SOFT CLOSE DRAWER / PUSH-OPEN DRAWER

1



Slides (left/right)

Pre-zinc Steel (F02)

NL	Soft Close item No.	Set/ctn	Push-open item No.	Set/ctn
250mm	SS80C250H	10	FF80C250HX	6
270mm	SS80C270H	10	FF80C270HX	6
300mm	SS80C300H	10	FF80C300HX	6
350mm	SS80C350H1	10	FF80C350HX	6
400mm	SS80C400H1	10	FF80C400HX	6
450mm	SS80C450H1	10	FF80C450HX	6
500mm	SS80C500H1	10	FF80C500HX	6
550mm	SS80C550H1	10	FF80C550HX	6
600mm	SS80C600H1	10	FF80C600HX	6

2



Locking Pin

Grey(H11)

Item No. **SJS01**

3



Rod for Push-open Synchronization
/For cutting to size,1100mm.Cutting:Internal cabinet width LW-180

Item No. **HT0FH02**

Soft close drawer

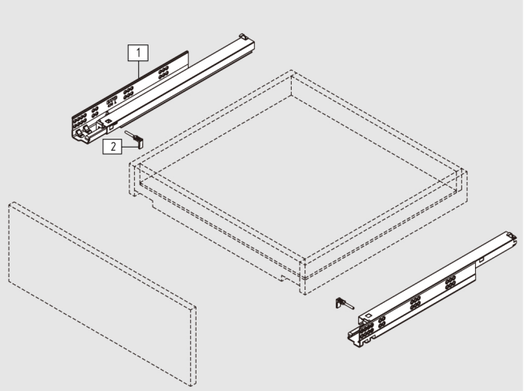

Push-open drawer

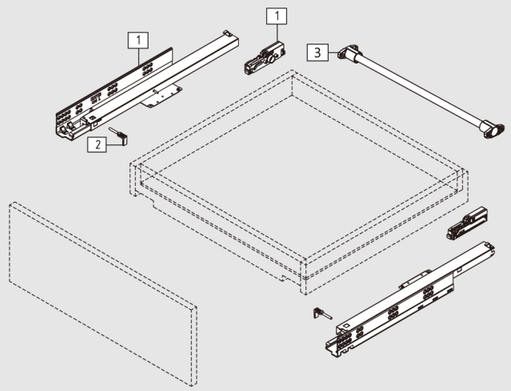

PLANNING

Installation Dimensions(mm)

NL=Nominal Slide Length LT=Internal Cabinet Depth LT=NL+3

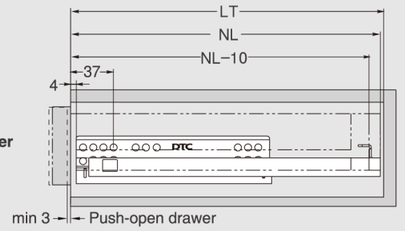

NL=Nominal Slide Length LT=Internal Cabinet Depth LT=NL+21

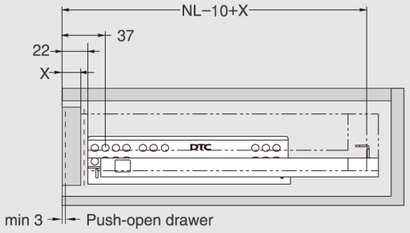

Fixing Hole Position for Inner Drawer(mm)

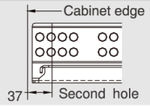

Screw Positions of the Slides(mm)

Installation Dimensions(mm)

SKW=Internal Drawer Width
LW=Internal Cabinet Width

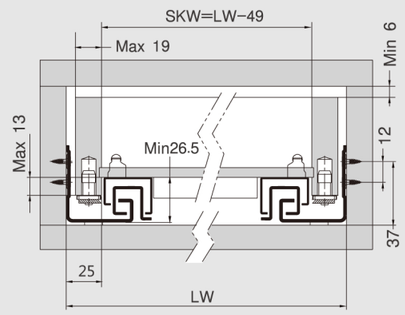

Drawer Back Preparation(mm)

Soft close drawer

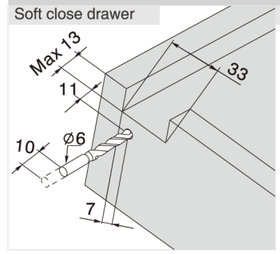

Push-open drawer

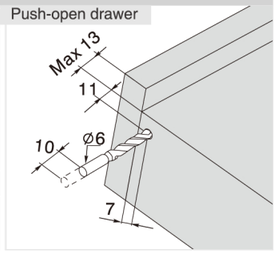

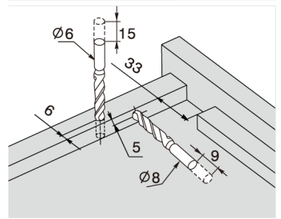

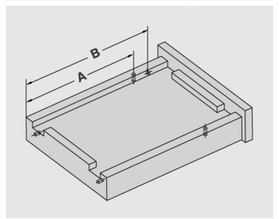

NL (mm)	250	270	300	350	400	450	500	550	600
A (mm)	190	205	245	270	305	330	355	390	415
B (mm)	200.5	215.5	255.5	280.5	319.5	369.5	419.5	469.5	519.5

UNDERMOUNT SLIDE

ASSEMBLY AND ADJUSTMENT

Assembly and Adjustment
(for D-MOTION Full Extension Undermount Slides)

DTC
Global Quality Benchmark

Drawer Assembly with Locking Device

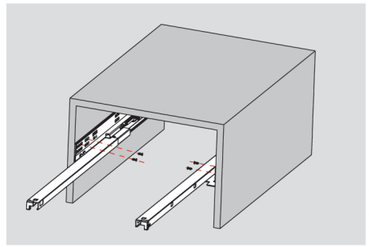

Fix the slide onto the cabinet.

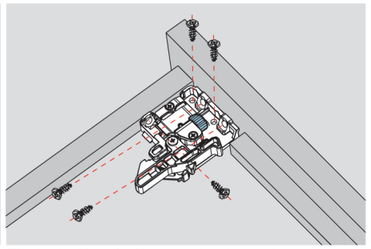

Fix the locking device onto the drawer bottom.

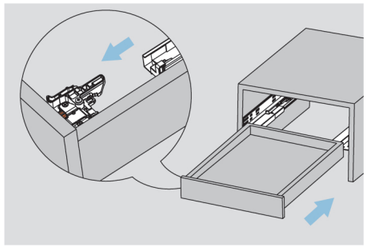

Lay the drawer bottom onto the slide then push the drawer into the cabinet.

Removal with Locking Device

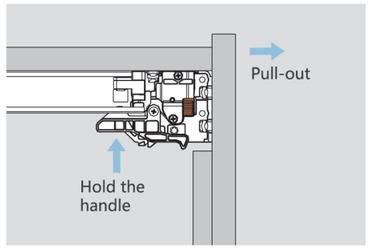

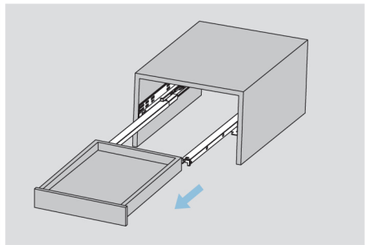

For removal, hold the handle and pull out the drawer.

Drawer Assembly with Peg

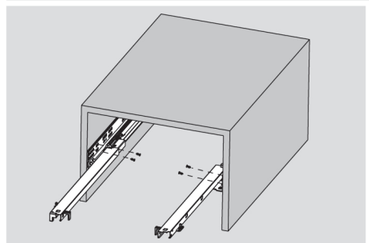

Fix the slide onto the cabinet.

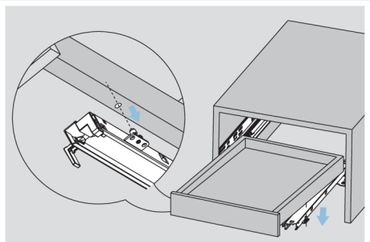

Pull out the drawer member of the slide from the cabinet, lay the drawer onto the slide.

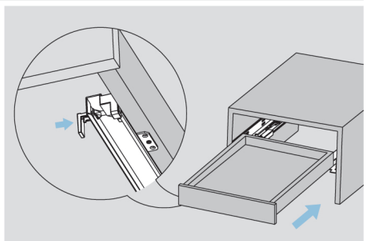

Press the locking pin into the drawer side to lock the position of the drawer.

Removal with Peg

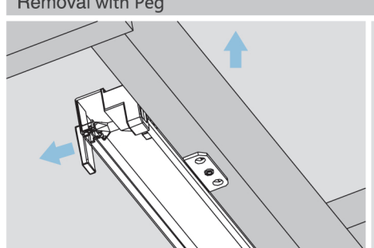

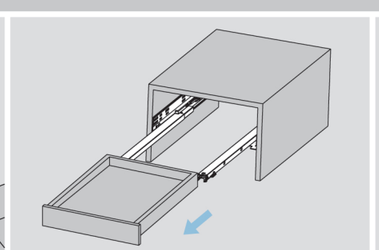

For removal, pull out the locking pin from the drawer side. Lift the drawer and pull it out from the cabinet.

DTC is always innovating!
For more information, please visit our website www.dtcdtc.com