User Manual

60 cm Integrated hood

MODEL:UA06-60A

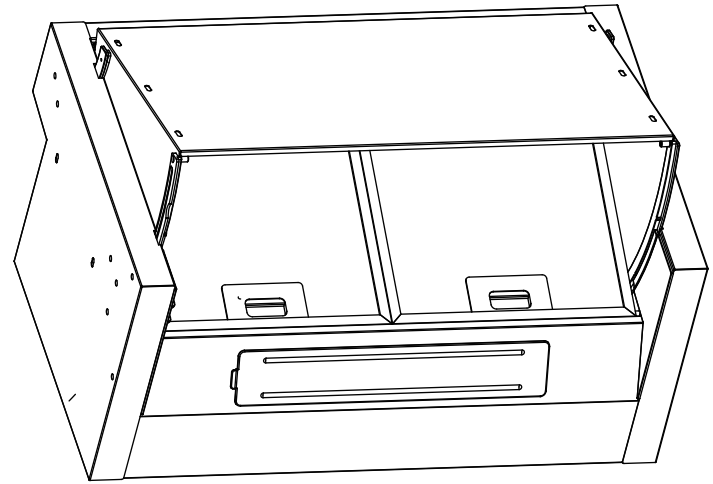

NOTE: ***This User Instruction Manual contains important information, including safety & installation points, which will enable you to get the most out of your appliance. Please keep it in a safe place so that it is easily available for future reference; for you or any person not familiar with the operation of the appliance.***

IMPORTANT SAFETY INFORMATION



Your safety is of the utmost importance to us. Please make sure that you read this instruction booklet ***before*** attempting to install or use the appliance. If you are unsure of any of the information contained in this booklet, please contact the Baumatic Customer Care Department.

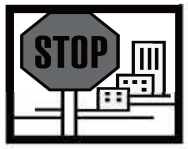

IMPORTANT: Any installation work must be carried out by a qualified electrician or competent person.

- The hood must be installed in accordance with the installation instructions and all measurements followed.

- When installing the hood, ensure that the following recommended distances are observed between the highest point on the hob top (including the burners) and the bottom of the cooker hood:



- **Electric cookers: 700 mm**
- **Gas cookers: 700 mm**
- **Coal/ oil cookers: 800 mm**

IMPORTANT: <u>DO NOT</u> SET YOUR COOKER HOOD LESS THAN 700mm ABOVE YOUR COOKER.

- When installed between adjoining wall cabinets, the cabinets must not overhang the hob.

- Remember that when in extraction mode, your cooker hood is removing air from your room. Ensure that proper ventilation measures are being observed.

- ***Note that the cooker hood removes odours from your kitchen, not steam.***

- ***Warning - Always ensure that the cooker hood has been disconnected from the power supply before carrying out any work on the hood, including cleaning and replacing light bulbs.***

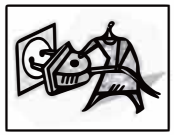

- To use the appliance in extraction mode it is necessary to install external ducting.

- Select a position that is suitable for the location of the cooker hood and will be accessible once the cooker hood is installed. Cut out a circle measuring 130 mm in diameter.

- The discharge outlet should be suitable for cooking vapours and it should have a cross section of at least 150 cm².

- Turn off the hob and then wait for the safety cut-out device to reset.

- ***IMPORTANT:*** *If you have installed your cooker hood too low, the safety cut-out device will frequently trip. Your cooker hood may become damaged if the safety cut-out device is tripped frequently.*

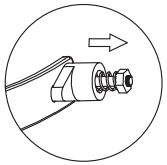

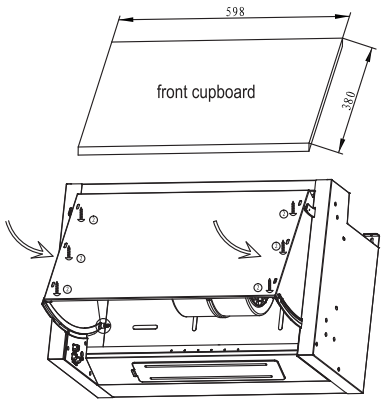

- Connect the air outlet board and the air outlet tube.

Connecting to external ducting

Recirculation:

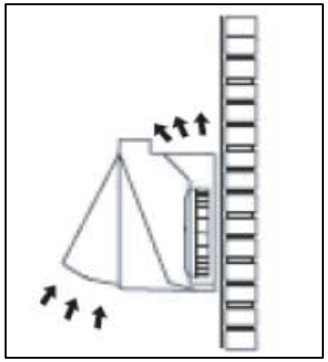

Ducted out:

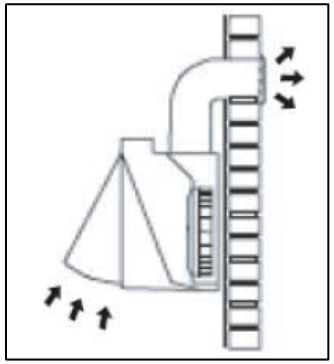

THE MANUFACTURER DECLINES ALL RESPONSIBILITY IN THE EVENT OF FAILURE TO OBSERVE THE INSTRUCTIONS GIVEN HERE, FOR INSTALLATION, MAINTENANCE AND SUITABLE USE OF THE HOOD.

CE

Specifications of your cooker hood

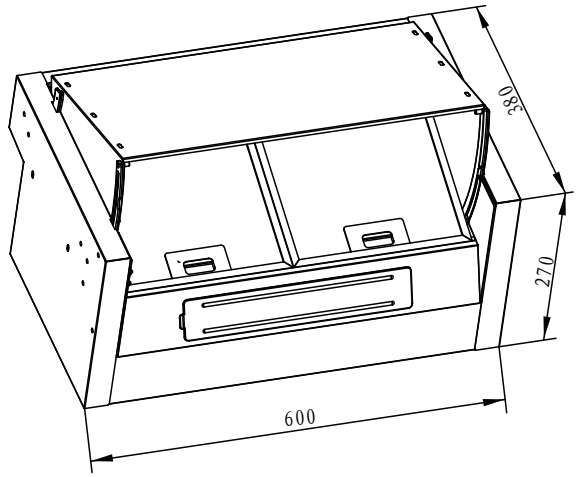

Dimensions:

Height: 380 mm
Width: 600 mm
Depth: 270 mm

Specifications:

- 1 / 2 x Integrated axial motor
- Slider control operation
- No-return airflow flap
- 3 Speeds
- 1 / 2 Lights
- 2 Washable aluminium grease filters
- Extraction capacity: 360 m³ / hr
- Recirculation capacity: 280 m³ / hr
- Noise level: 52 / 53 / 55 dB

Optional extras:

- 1 pair of R1 carbon filters for air recirculation mode

Using your cooker hood

Before first use



IMPORTANT: THIS PROCESS <u>MUST</u> BE FOLLOWED BEFORE THE COOKER HOOD IS USED FOR THE FIRST TIME.

- You should clean the appliance using a brand new cloth, with warm soapy water before using the appliance for the first time. You should then dry it thoroughly using a soft cloth.

To use your cooker hood

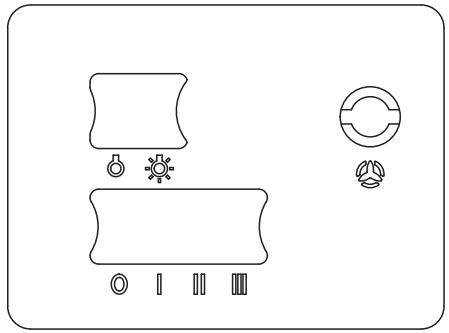

- There are two sliders on the control panel, which perform separate functions.

Light ON/OFF slider

= Light bulb off
= Light bulb on

Speed control slider

= Off

= Low speed

= Medium speed

= High speed

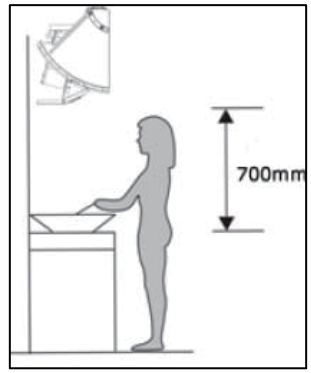

- It must be positioned at least 700 mm above the hob underneath it. This measurement should be taken from the highest point on the hob, including the burners.

IMPORTANT: YOUR COOKER HOOD SHOULD BE CONNECTED TO YOUR MAINS SUPPLY <u>AFTER</u> THE REST OF THE INSTALLATION PROCESS HAS BEEN COMPLETED.

- Remove the grease filter and whirling board as per the above indication.
- Nail the bracket onto the wall with screw 1.
- Fix the hood onto the bracket, adjust to a suitable distance from the wall, and fix it with screw 3 and screw nut 4.
- Adjust the height of the hood with screw 5.
- After finalizing the position, nail screws 2 4 pcs from inside the side board into the two side cupboards to fix the hood.

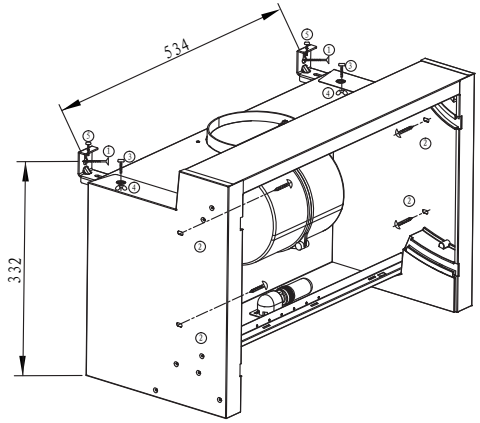

No.	Specifications	Drawing	Quantity
①	ST5*45		2
②	ST4.2*30		10
③	M5*16		2
④	M5(screw nut)		2
⑤	M4*20		2

- Pull the plastic knob of the two below runners aside as shown in the below drawing, and slide the whirling board into the four runners.
- fix the the whirling board onto the front cupboard with screws 2 6pcs.

We recommend that the appliance is connected by a qualified electrician, who is a member of the N.I.C.E.I.C. and who will comply with the I.E.E. and local regulations. The wires in the mains lead are coloured in accordance with the following UK code:

Electrical connection

See below electrical diagram.

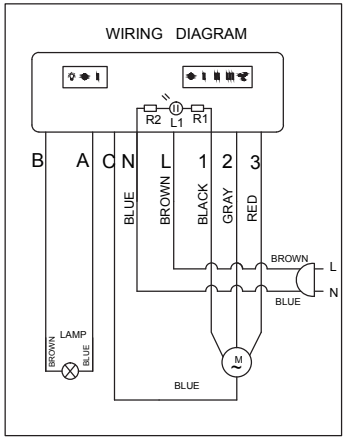

SINGLE MOTOR

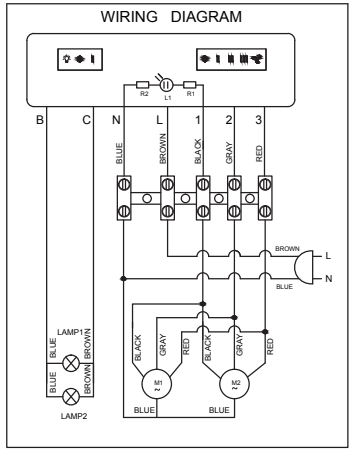

DOUBLE MOTOR

YOUR COOKER HOOD IS INTENDED FOR FITTED AND PERMANENT INSTALLATION.

Installing your cooker hood



IMPORTANT: YOU WILL HAVE TO DECIDE BEFORE INSTALLING YOUR COOKER HOOD WHETHER TO USE IT IN EXTRACTION MODE OR RECIRCULATION MODE.

- We recommend that at least two people install this hood.
- Your cooker hood should only be fitted to a wall and secured between two cupboards.

- The cooker hood can be operated by leaving the speed control slider on setting Ⅰ, Ⅱ or Ⅲ and closing the extractor door. This will automatically turn the motor off.
- When the extractor door is opened again, the motor will resume at the last set speed. The same also applies for the light slider control.

Turning the cooker hood off

You can turn the cooker hood off in two ways.

- The cooker hood can be switched off by setting the motor speed control to 0.
- You can close the extractor door to switch the cooker hood off however the motor speed will remain the same when you next lift the cover up.



IMPORTANT: IDEALLY YOU SHOULD TURN ON YOUR HOOD TEN MINUTES BEFORE YOU START TO COOK, OR AT THE VERY LEAST WHEN YOU BEGIN COOKING. YOU SHOULD ALSO RUN YOUR HOOD FOR TEN MINUTES AFTER YOU HAVE FINISHED COOKING.

Cleaning your cooker hood

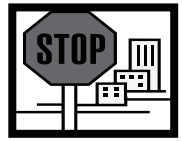

IMPORTANT: BEFORE CLEANING, ALWAYS ENSURE THAT YOU HAVE SWITCHED YOUR COOKER HOOD <u>OFF</u> AT THE OMNI-POLAR SWITCH, SET AT THE WALL FROM THE CABLE.

Maintenance

Removing and cleaning the grease filter

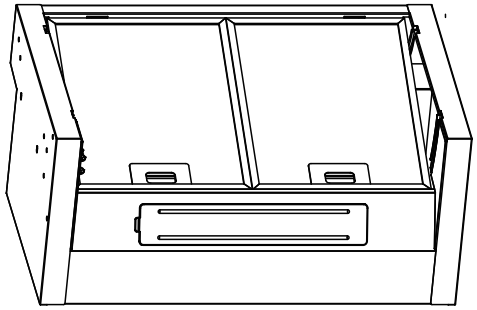

- Push up the clasp at the base of the filter from the open direction.
- Then remove the filter form the hood as the above drawing.
- Ensure the filter unclips from the hood, as shown in the diagram above, before you pull it away.
- Soak the grease filter in hot water and washing up liquid for about 2 – 3 minutes.
- Clean the filter with a soft brush but do not brush too hard in case you damage the filter.
- ***IMPORTANT: Let the grease filter dry thoroughly before refitting it in the cooker hood.***

Fitting the carbon filter(if any)

If the appliance is going to be used in recirculation mode then it is necessary to a fit a carbon filter. This will help to absorb unpleasant odours caused by cooking.



IMPORTANT: BEFORE ATTEMPTING TO FIT OR REMOVE THE CARBON FILTERS, YOU MUST ENSURE THAT YOU HAVE DISCONNECTED THE COOKER HOOD FROM YOUR MAINS SUPPLY.

- The above removing the grease filter will allow you access to the motor where the carbon filter should be fitted.
- Hook the carbon filter onto the motor.

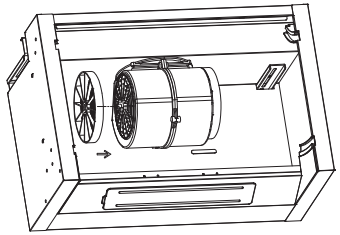

SINGLE MOTOR

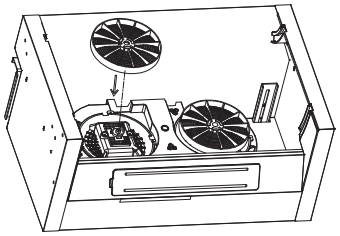

DOUBLE MOTOR

- Turn the carbon filter clockwise, until you feel it click into place.

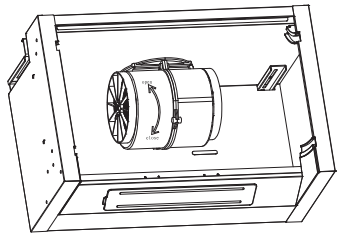

SINGLE MOTOR

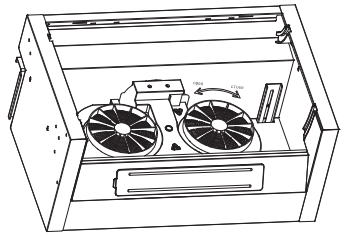

DOUBLE MOTOR

- Refit the grease filter, making sure it clips back into the hood correctly.
- The carbon filters should be replaced every three months, or if they show signs of damage. To remove the carbon filter, turn it anticlockwise so it unlatches from the motor.

Installation

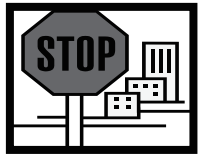

IMPORTANT: Before installation and usage read all the instructions and make sure that the voltage (V) and the frequency (Hz) indicated on the rating plate are exactly the same as the voltage and frequency in your home. The rating plate can be found behind the grease filter.

The manufacturer declines all responsibility in the event of the installer failing to observe all of the accident prevention regulations in force, which are necessary for normal use and the regular operation of the electric system.