Mod. 1
SHELF BRACKET

SUPPORTS



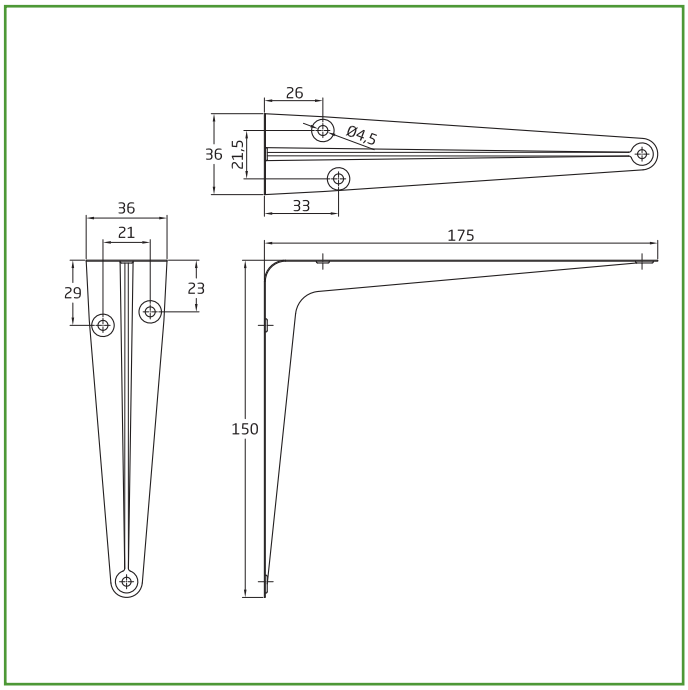

Measurements: 175 x 150 mm

Material: Steel

Finish: White

Code: 495

Presentation: Without individual EAN

EAN unit:



Features

Support made of high quality steel. Reinforced, robust and functional design. Suitable to support medium loads. Allows you to expand storage space.

Ecofriendly

At AMIG we aim to offer the best quality in our products without harming the environment. For this reason, we work to comply at all times with environmental regulations in our processes, as well as by implementing the Comprehensive Management System (SIG) for packaging waste.

Assembly instructions / Utilities

The wall bracket is a versatile, resistant and easy-to-install product that offers a practical and durable solution for installing shelves in any space.

Care and cleaning

Clean with a dry cloth. Do not use abrasive and/or corrosive products, detergents, solvents or alcohols.

Product Logistics:

Product Length (cm):	18
Product width (cm):	15
Product height (cm):	3,8
Product weight (gr):	59

Packaging data:

Servings per Innerbox:	20
Innerbox length (cm):	23,5
Innerbox width (cm):	20,5
Innerbox height (cm):	5
Innerbox weight (Kg):	1,294
Innerbox EAN:	8413023004955

Amount per cartonbox:	240
Cartonbox length (cm):	42
Cartonbox width (cm):	33
Cartonbox height (cm):	25
Cartonbox weight (Kg):	15,12
Cartonbox EAN:	8413023704954