HINGES

Mod. 3037
DOUBLE EFFECT SPRING HINGE

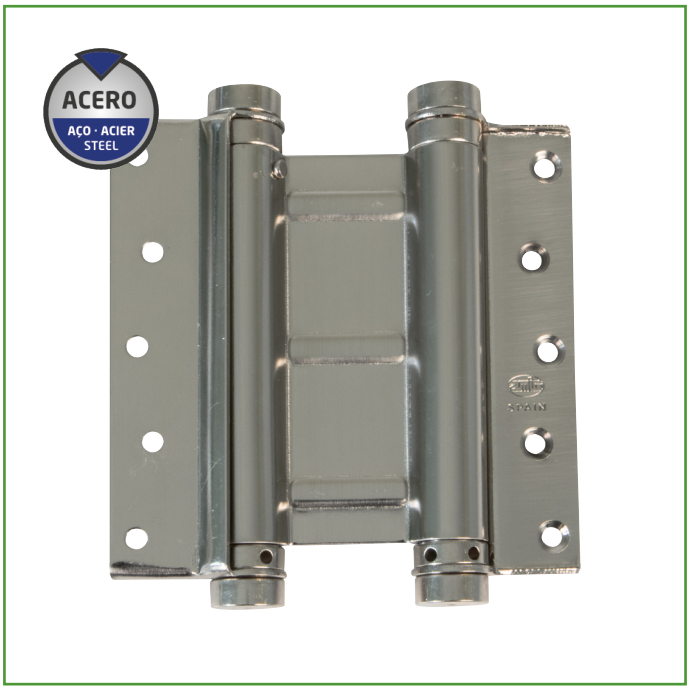

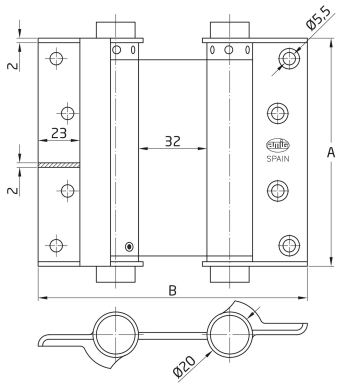

Mod.	A (mm)	B (mm)	Puerta - Porta - Door - Porte (m)	(mm)	Kg
3037 - 75	77	130	0.65	Max. 28	16
3037 - 100	102	130	0.75	Max. 32	24
3037 - 125	125	130	0.90	Max. 32	30

Measurements: 75 x 126 mm

Material: Steel

Finish: Chromed

Code: 9817

Presentation: With individual EAN

EAN unit: 8413023098176



Features

Double action hinge with square edge made of high quality steel. Closing power regulation. Great resistance to torsion. Flexible elastic steel spring. Accessories included.

Ecofriendly

At AMIG we aim to offer the best quality in our products without harming the environment. For this reason, we work to comply at all times with environmental regulations in our processes, as well as by implementing the Comprehensive Management System (SIG) for packaging waste.

Assembly instructions / Utilities

Les charnières à double action permettent d'ouvrir les portes dans les deux sens. Les portes se ferment automatiquement. Idéal pour les portes de cuisine dans les restaurants, les hôpitaux, les cantines. Installation facile.

Care and cleaning

Clean with a dry cloth. Do not use abrasive and/or corrosive products, detergents, solvents or alcohols.

Product Logistics:

Product Length (cm):	17
Product width (cm):	4
Product height (cm):	3,2
Product weight (gr):	367

Packaging data:

Servings per Innerbox:	4
Innerbox length (cm):	14,6
Innerbox width (cm):	10,5
Innerbox height (cm):	5
Innerbox weight (Kg):	1,944
Innerbox EAN:	8413023498174

Amount per cartonbox:	24
Cartonbox length (cm):	23
Cartonbox width (cm):	16,5
Cartonbox height (cm):	17,5
Cartonbox weight (Kg):	9,36
Cartonbox EAN:	8413023798175