2

GLASS SHELF SUPPORTS

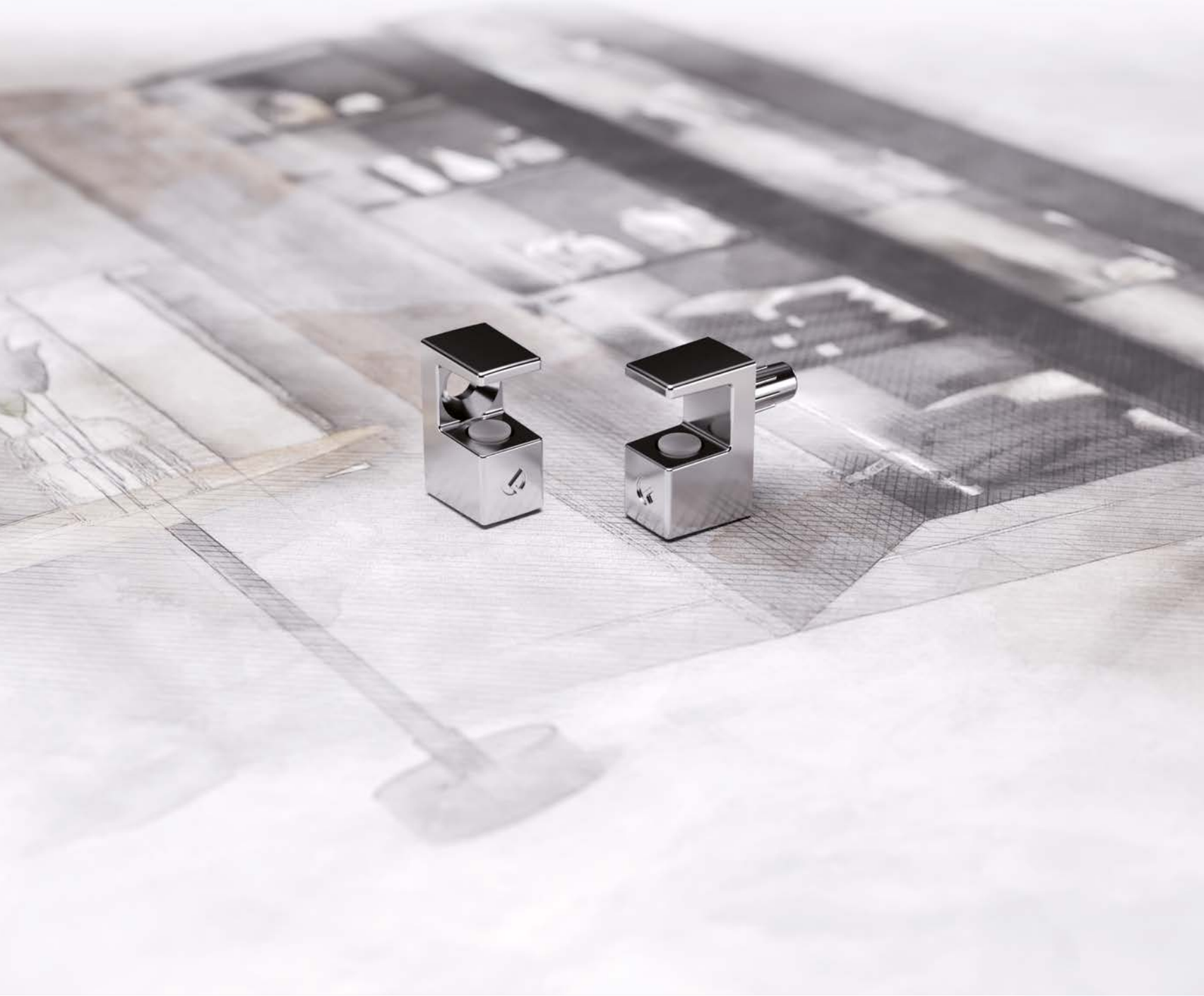

ITALIANA ferramenta

SYMBOLS AND FINISHES LEGEND

SYMBOLS

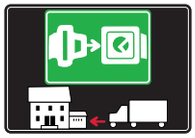

= SHELF SAFELY LOCKED DURING TRANSPORTATION AND AT HOME.



= ANTI-TURNOVER LOCKING SYSTEM

= NORMS / PATENTS

= PART NO.

= PCS. PER PACKAGE

= CAPACITY LOADING

= WOOD / GLASS THICKNESS

= HOLE DIAMETER

= DIAMETER

= LENGTH

= HEIGHT

= RIGHT VERSION

= LEFT VERSION

= SETTING CODE

= PCS. PER PAD

= CUT ON REQUEST

= SELF ADHESIVE

= PHILLIPS / POZIDRIV

= BLADE SLOT

= COMBI SLOT

= HEXAGONAL SOCKET

= HEXALOBULAR SOCKET

= COUNTERSUNK HEAD

= PAN HEAD

= FLANGE HEAD

= FLAT HEAD

= TRILOBULAR SCREW

= SELF-TAPPING SCREW

= EURO THREAD

= METRIC THREAD

= PRE-INSERTED SCREW

= PRE-INSERTED SCREW AND SPREADING BUSH

= WITH BUFFER

= WITH MAGNET

= NEWTON

= FRICTION

= AUTOMATIC

= DROP DOWN

= STANDARD HINGE

= KIMANA HINGE

= FLAP HINGE

= WITH SPRING

= WITHOUT SPRING

= REVERSED SPRING

= WITH FLANGE

NOTE: Printing errors and omissions may exist despite our best efforts to ensure accurancy. We reserve the right to alter specifications without notice.

MATERIALS

ZA = Zinc Alloy

ST = Steel

HSS = High Speed Steel

BR = Brass

ABS = Acrylonitrile Butadiene Styrene

ZAnk = Nickel-plated Zinc Alloy

STzk = Zinc-plated Steel

AL = Aluminium

WD = Wood

EVA = Ethylene Vinyl Acetate

EP = **ENGINEERING PLASTIC**

\+ EP = other engineering plastic available on request

SR = **SOFT RUBBER**

\+ SR = other soft rubber available on request

EPn = Natural Engineering Plastic

EPc = Clear Engineering Plastic

SRn = Natural Soft Rubber

EPw = White Engineering Plastic

EPg = Grey Engineering Plastic

SRw = White Soft Rubber

EPwg = Water Green Engineering Plastic

EPa = Anthracite Engineering Plastic

SRb = Black Soft Rubber

FINISHES

\+ = OTHER FINISHES AVAILABLE ON REQUEST

PART NO.	FINISHES	PART NO.	FINISHES	PART NO.	FINISHES
00	Insignificant finish	**IF**	Middle Grey	**RO**	Red
AA	Natural	**IJ**	Light Grey	**UT**	T-Met 9007
AB	White	**IL**	Grey 20	**UZ**	T-Met
AE	White 9010	**IN**	Grey met. 26	**WA**	Bronzed
EA	Black	**JB**	Bright Aluminium	**WI**	Burnished
EC	Matt Black	**JC**	Aluminium - Chrome	**XD**	Satin-finished Steel
EE	Anthracite	**JD**	Matt Aluminium	**YA**	Nickel-plated
EW	Grey 9007	**JE**	Satin-finished Aluminium	**YB**	Bright Nickel-plated
FU	Gunmetal	**JF**	Aluminium - Brass	**YC**	Matt Nickel-plated
FV	Gunmetal V52	**JG**	Aluminium 5	**YD**	Satin-finished Nickel-plated
GR	Raw	**JL**	Aluminium PE 11	**YQ**	Black Nickel
HA	Brass-Plated	**JM**	Aluminium RAL 9006	**Z9**	Black Zinc
HH	Tropicalized	**KA**	Chrome	**ZA**	Zinc alloy
HL	Raw Brass	**KB**	Bright Chrome	**ZN**	Zinc-plated
HX	Graphite	**KC**	Matt Chrome	**ZQ**	Bright Gold
IA	Grey	**LD**	Brown 8019	**ZY**	Titanum
IB	Metallic Grey	**NN**	Metallic Beige	**ZZ**	Clear

Table of contents

DREAM 2.1

K LINE 2.2

VERY 2.4

OR 2.4

ATAK 2.5

GEKO 2.6

GLASS SHELF SUPPORT 2.6

GRACE 2.7

KRISTAL 2.11

COBRA 2.15

PEKI 2.19

KUBIC 2.21

PULL 2.25

DREAM



Certificates available on request.

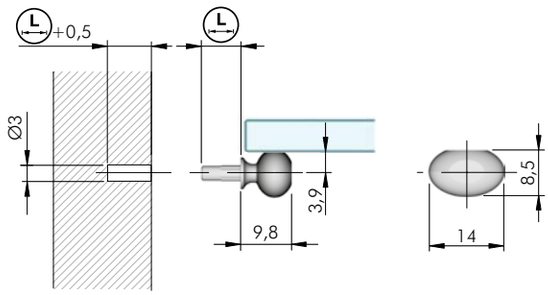



= Ø 3 mm

ZA SR

= 5000 pcs.

	L	
16002010YA	7,5	SRn
16002020YA	10,5	SRn
16002030YA	7,5	SRb
16002040YA	10,5	SRb

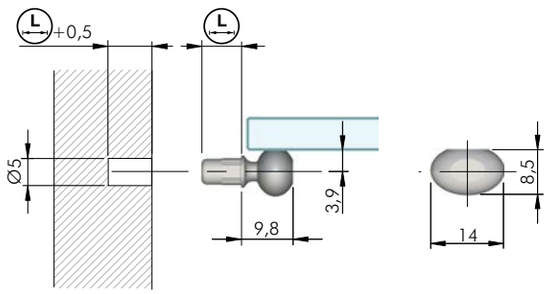



= Ø 5 mm

ZA SR

= 5000 pcs.

	L	
16002050YA	7,5	SRn
16002060YA	10,5	SRn
16002070YA	7,5	SRb
16002080YA	10,5	SRb

2

K LINE



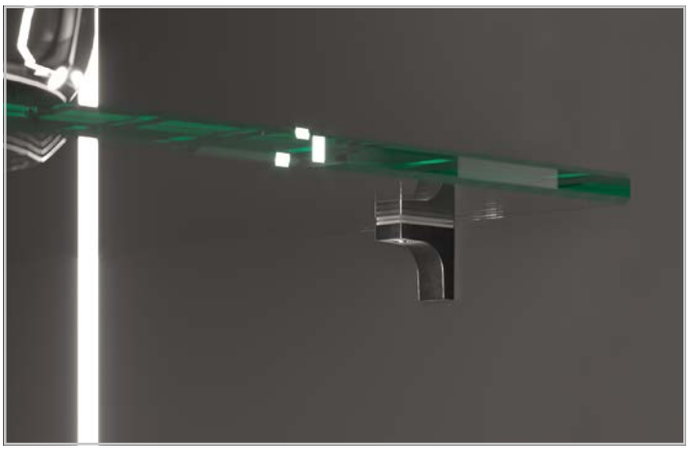

Certificates available on request.

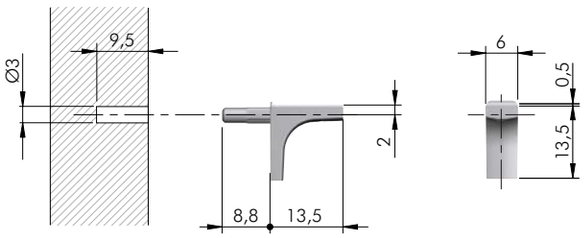



= Ø 3 mm +

ZA SRn = 5000 pcs.

10208250YA | **YQ**

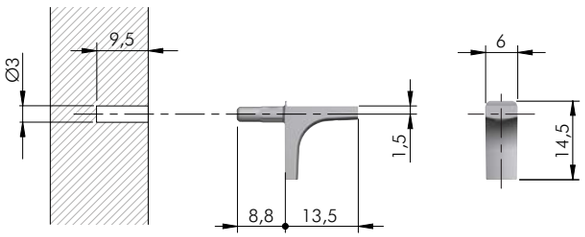



= Ø 3 mm +

ZA = 5000 pcs.

10208230YA | **YQ**

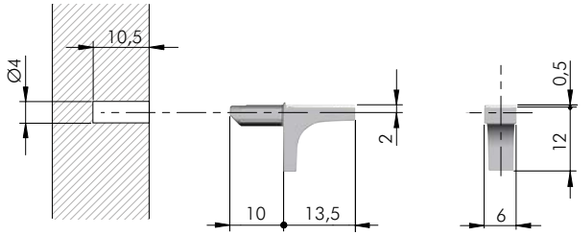



= Ø 4 mm +

ZA SRn = 5000 pcs.

10208150YA | **YQ**

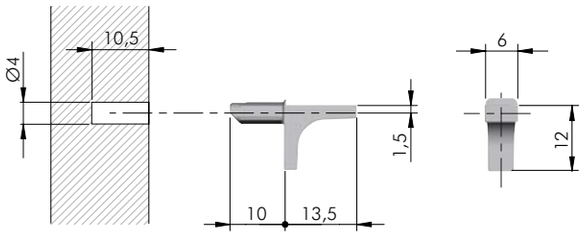



= Ø 4 mm

ZA

= 5000 pcs.

10208110YA | **YQ**

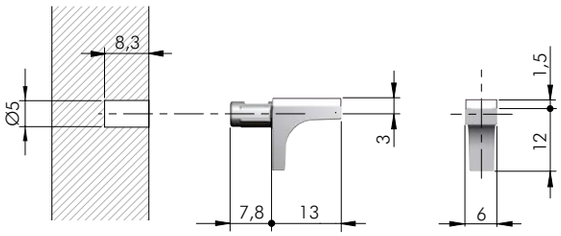



= Ø 5 mm

ZA SRn

= 5000 pcs.

10208030YA | **YQ**

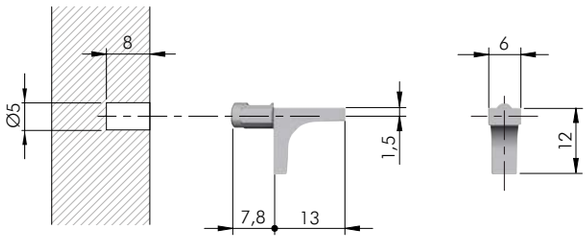



= Ø 5 mm

ZA

= 5000 pcs.

10208020YA | **YQ**

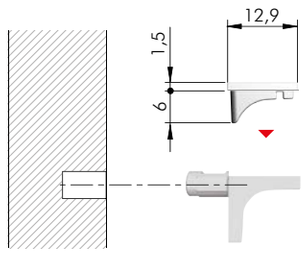



SRn

= on request

10208060AA

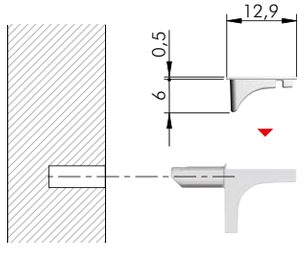



SRn

= on request

10208070AA

2

VERY

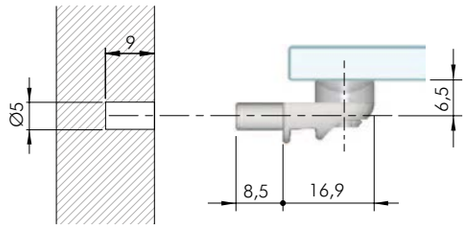



= Ø 5 mm +

ZA SRn = 2500 pcs.

16003010YA

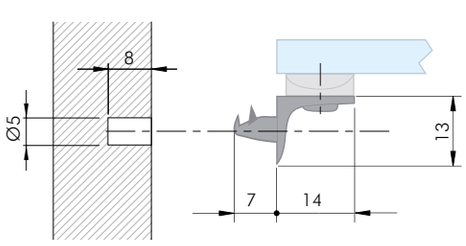



= Ø 5 mm +

ZA SRn = 5000 pcs.

10209040YA

OR

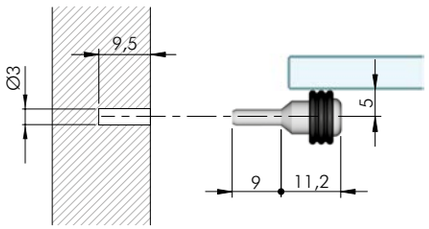



= Ø 3 mm +

ST SRb = 5000 pcs.

16001010YA **YQ**

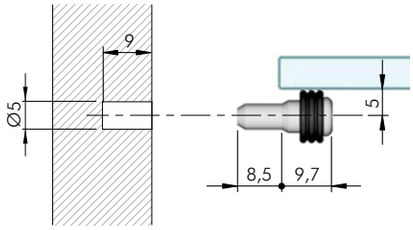



= Ø 5 mm +

ST SRb = 5000 pcs.

16001020YA **YQ**

ATAK

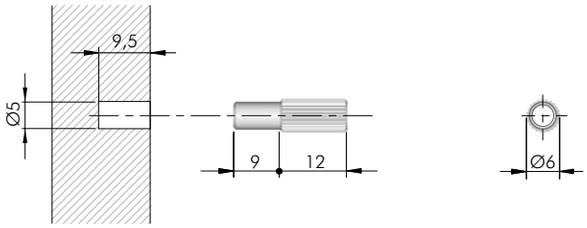



= Ø 5 mm +

ST

= 2500 pcs.

16006010ZN

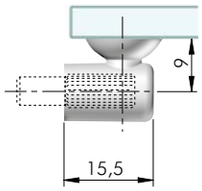

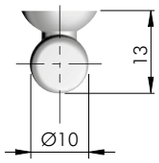

SRn

= 5000 pcs.

16004010AA

2

GEKO

Certificates available on request.

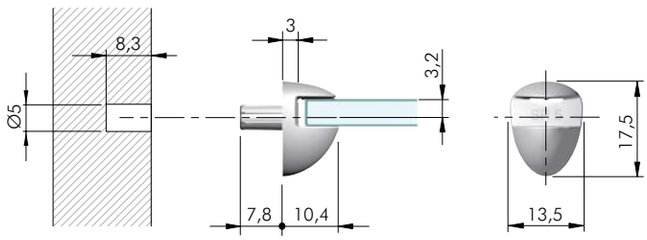



= 5 mm

= Ø 5 mm

EP

= 5000 pcs.

16010010ZZ

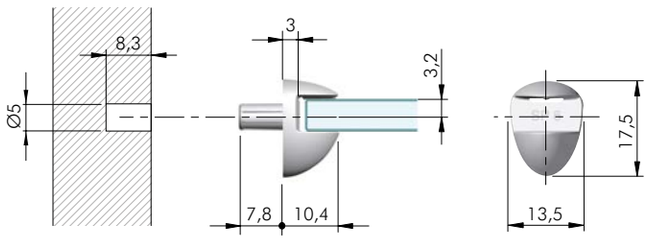



= 6 mm

= Ø 5 mm

EP

= 5000 pcs.

16010020ZZ

GLASS SHELF SUPPORT

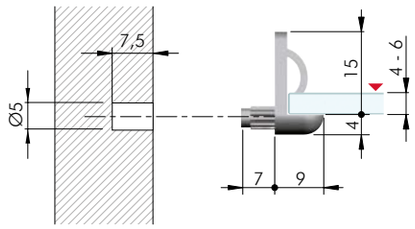



= 4 - 6 mm

= Ø 5 mm

EP

= 1500 pcs.

16009010ZZ

GRACE



5 - 8 mm

INSTALLATION

Assembling with smooth pin

Assembling with alternative fixing options to achieve horizontal connection

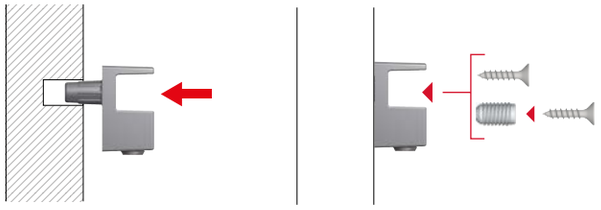



The coloured part is a clear plastic insert

Metric insert in zink alloy nickel plated cross PZ2 screwdriver

SHELF INSTALLATION

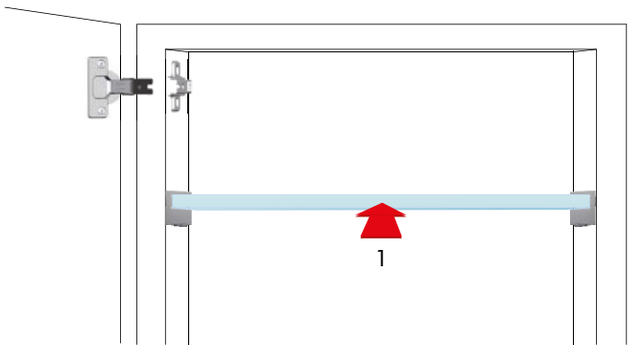

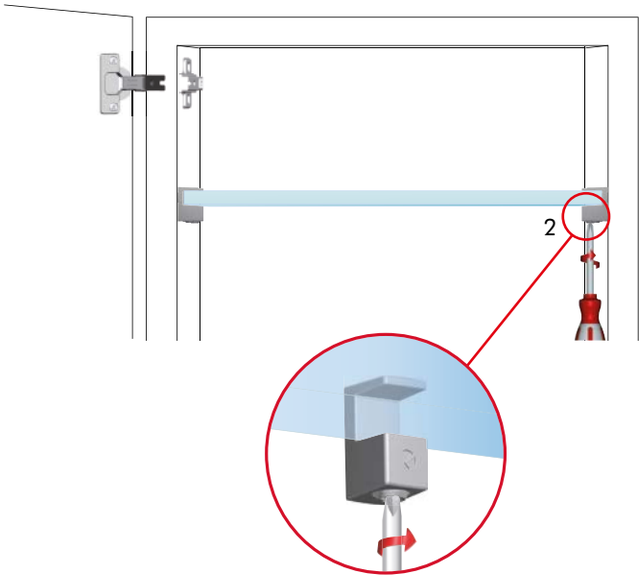

SHELF REMOVAL FOR NEW REPOSITIONING

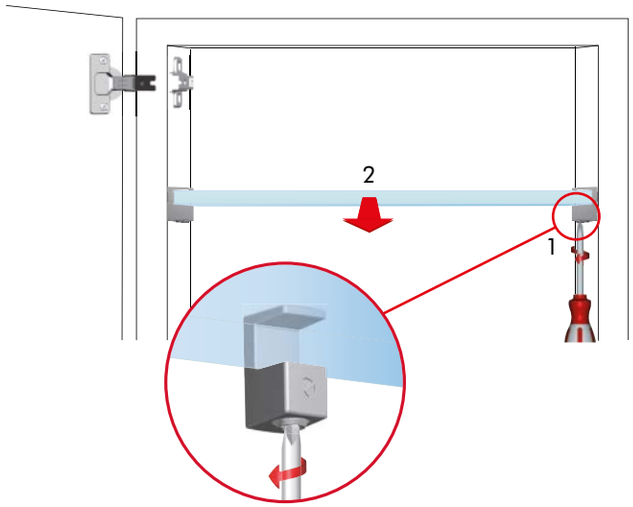

Back to table of contents

2

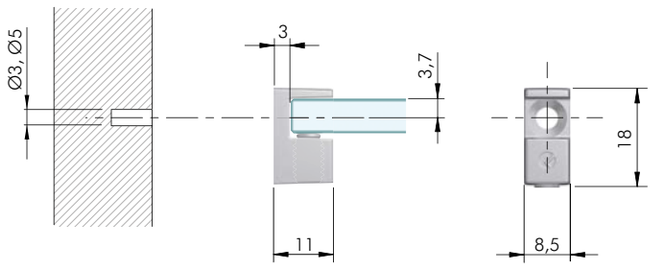



= Ø 3, Ø 5 mm

= 5 - 6 mm

= PZ2

ZA SRn

16120010YA	2000
16120010YQ	2000
16120010KB	1600

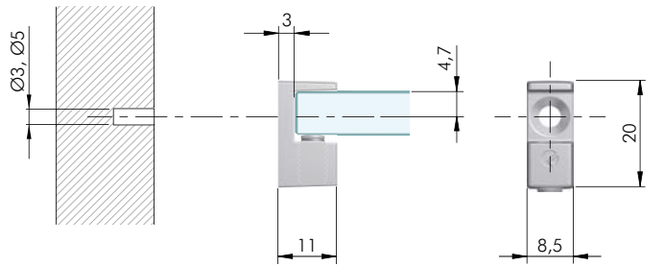



= Ø 3, Ø 5 mm

= 8 mm

= PZ2

ZA SRn

16121010YA	2000
16121010YQ	2000
16121010KB	1600

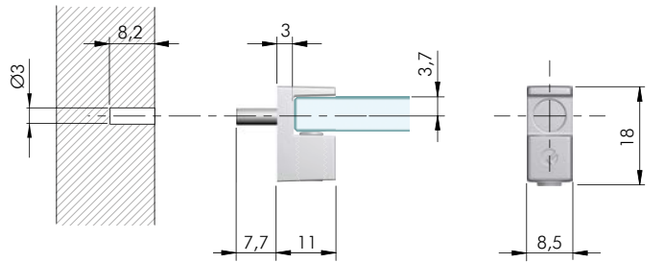



= Ø 3 mm

= 5 - 6 mm

= PZ2

ZA SRn ST

16120020YA	2000
16120020YQ	2000
16120020KB	1600

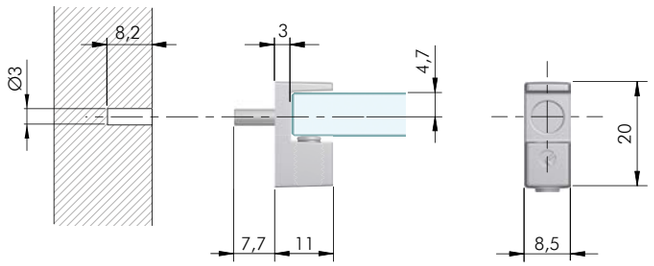



= Ø 3 mm +

= 8 mm = PZ2

ZA SRn ST

16121020YA	2000
16121020YQ	2000
16121020KB	1600

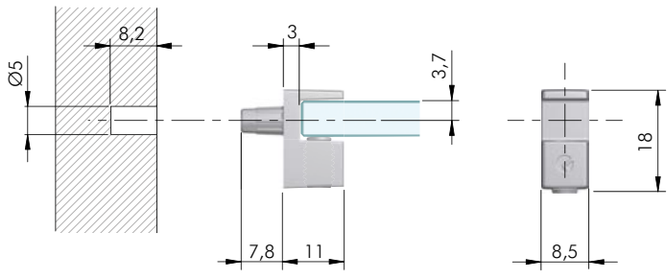



= Ø 5 mm +

= 5 - 6 mm = PZ2

ZA SRn

16120030YA	2000
16120030YQ	2000
16120030KB	1600

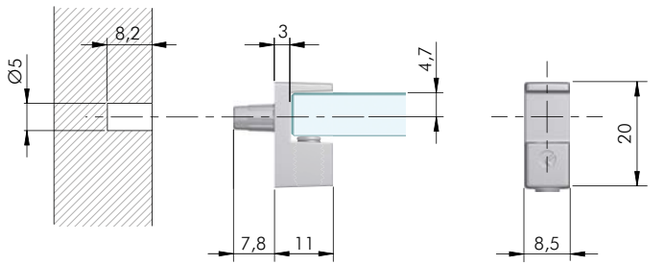



= Ø 5 mm +

= 8 mm = PZ2

ZA SRn

16121030YA	2000
16121030YQ	2000
16121030KB	1600

GRACE FIXING ACCESSORIES

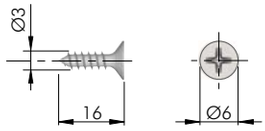



= spot-drilling

= PZ1

ST

= 10.000 pcs.

60101210ZN

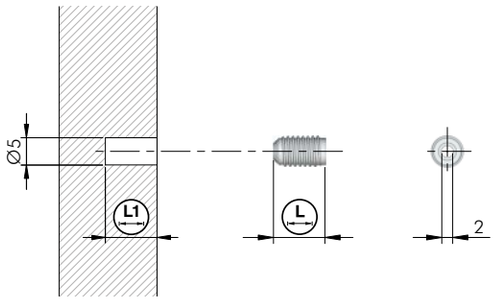



= Ø 5 mm

EPn

= 10.000 pcs.

	L	L1
20302020AA	9,5	11,5

Back to table of contents

KRISTAL



5 - 8 mm

REGISTERED DESIGN
Certificates available on request.

INSTALLATION

Assembling with smooth pin

Assembling with alternative fixing options to achieve horizontal connection

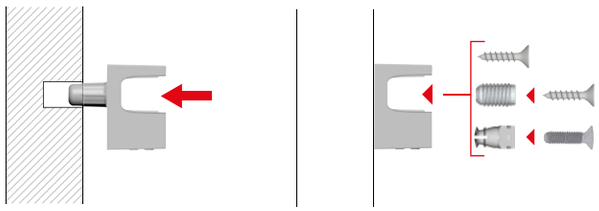



The coloured part is in clear soft rubber

Metric insert in steel
cross PZ2 screwdriver

SHELF INSTALLATION

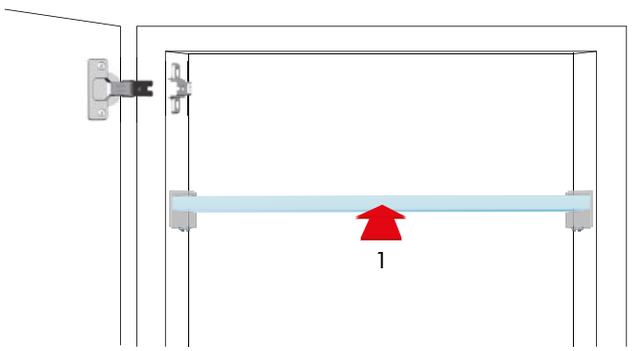

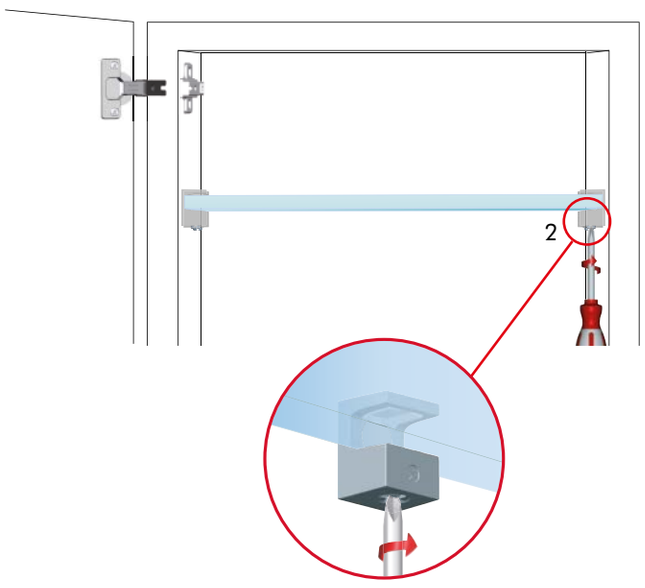

SHELF REMOVAL FOR NEW REPOSITIONING

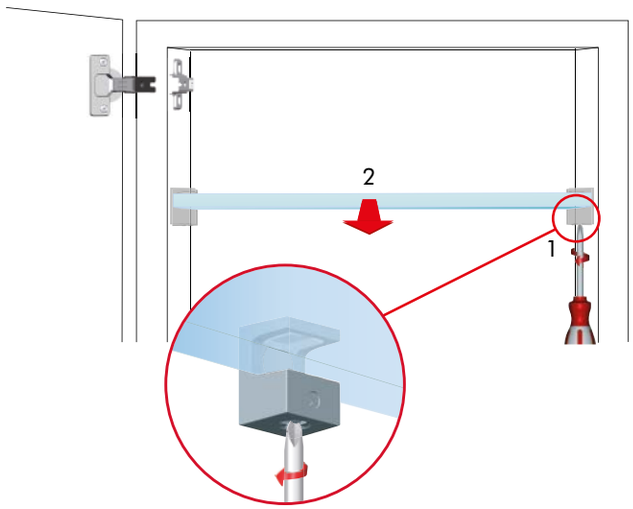

Back to table of contents

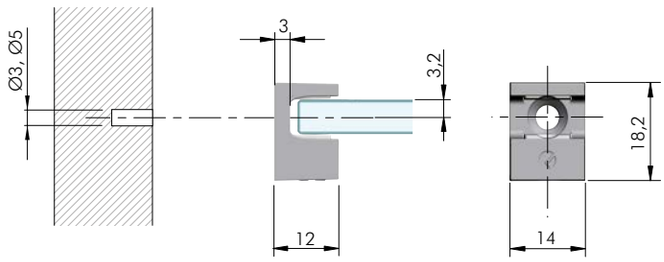



= Ø 3, Ø 5 mm +

= 5 - 6 mm = PZ2

ZA SRn ST = 1000 pcs.

16113010YA

16113010KB

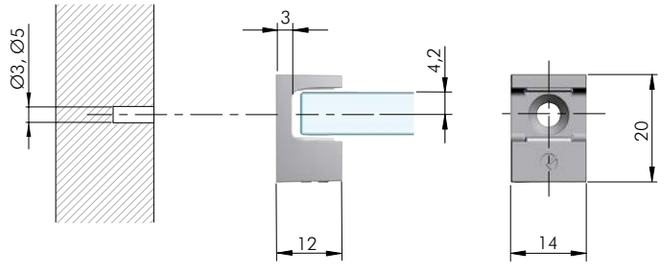



= Ø 3, Ø 5 mm +

= 8 mm = PZ2

ZA SRn ST = 1000 pcs.

16114010YA

16114010KB

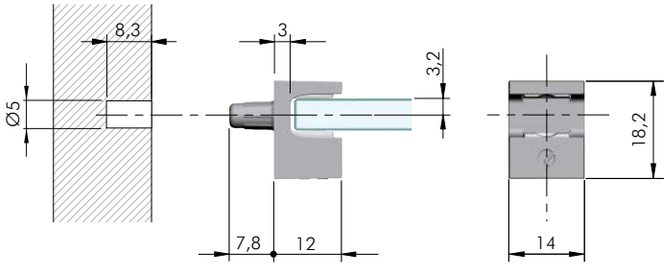



= Ø 5 mm +

= 5 - 6 mm = PZ2

ZA SRn ST = 1000 pcs.

16113040YA

16113040KB

Back to table of contents

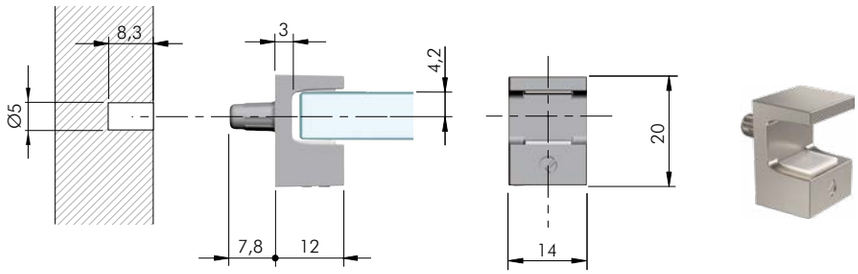

= Ø 5 mm +

= 8 mm = PZ2

ZA SRn ST = 1000 pcs.

16114040YA

16114040KB

KRISTAL FIXING ACCESSORIES

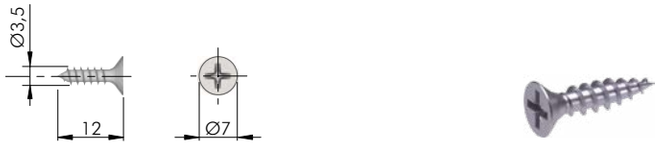

= Ø 3 mm

= PZ2

ST = 10.000 pcs.

60101380ZN

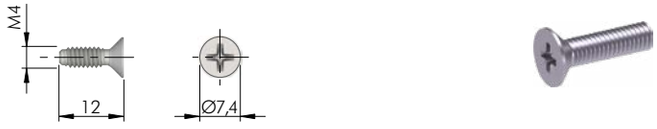

= M4 = PZ2

ST = on request

60305040ZN

2

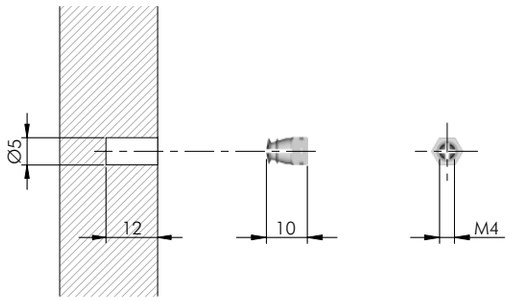



= Ø 5 mm = M4

BR = 10.000 pcs.

20502021HL

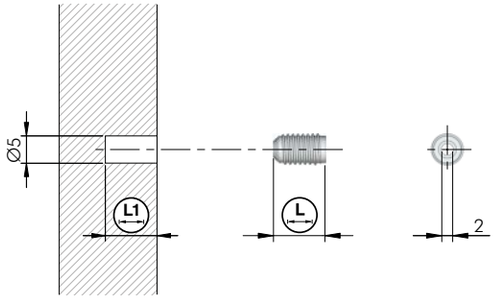



= Ø 5 mm

EPn = 10.000 pcs.

	L	L1
20302020AA	9,5	11,5

COBRA



5 - 10 mm

Certificates available on request.

INSTALLATION

Assembling with smooth pin

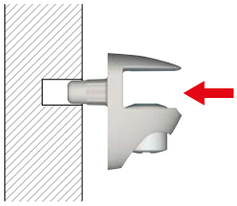

Assembling with alternative fixing options to achieve horizontal connection

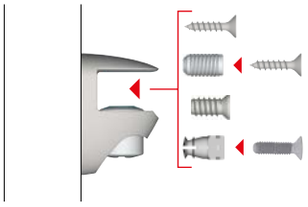



Metric insert in engineering plastic
cross PZ2 screwdriver

SHELF INSTALLATION

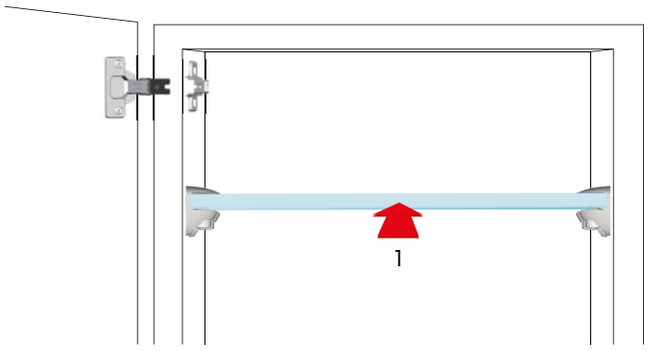

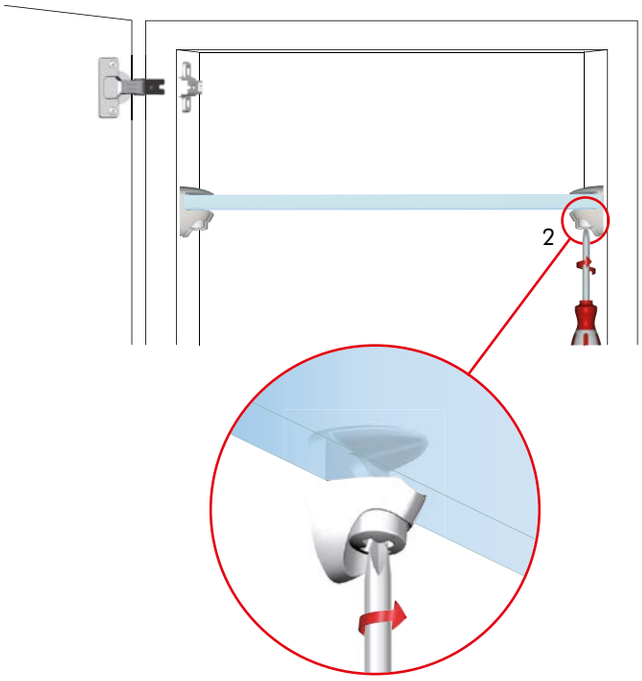

SHELF REMOVAL FOR NEW REPOSITIONING

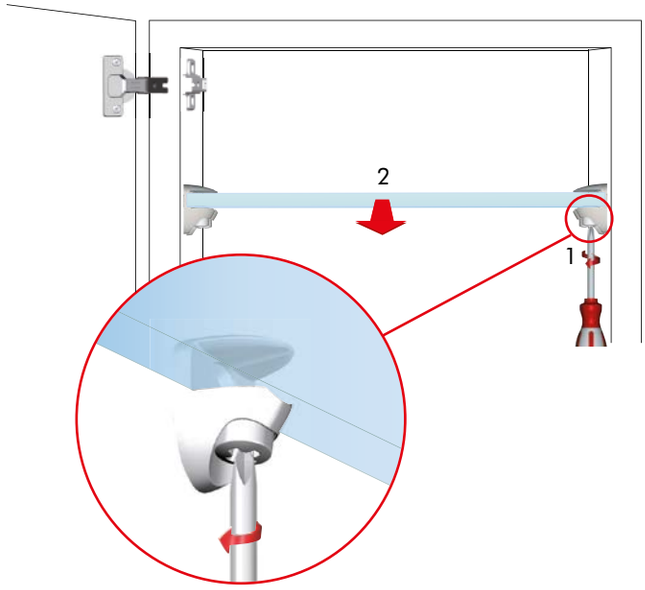

Back to table of contents

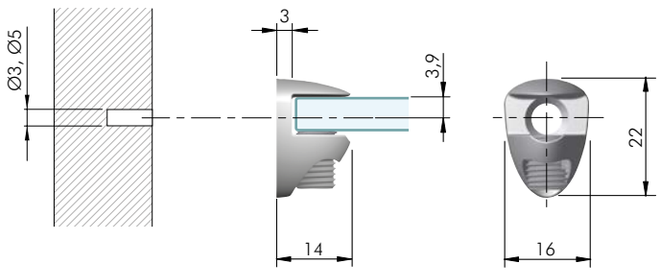



= Ø 3, Ø 5 mm +

= 5 - 6 mm = PZ2

ZA EPn = 2500 pcs.

16014010YA

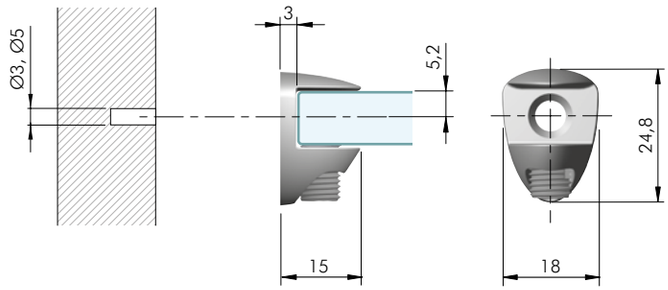



= Ø 3, Ø 5 mm +

= 8 - 10 mm = PZ2

ZA EPn = 2500 pcs.

16014020YA

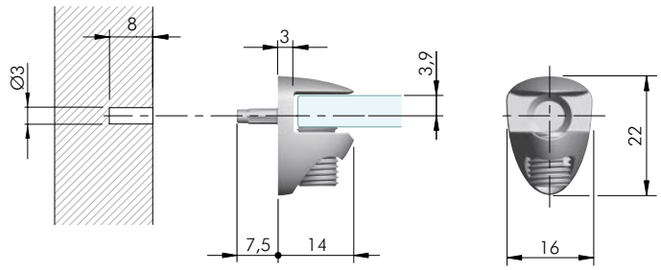



= Ø 3 mm +

= 5 - 6 mm = PZ2

ZA EPn = 2500 pcs.

16014090YA

Back to table of contents

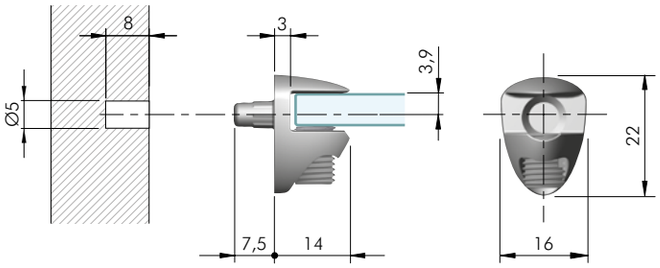



= Ø 5 mm +

= 5 - 6 mm = PZ2

ZA EPn = 2500 pcs.

16014030YA

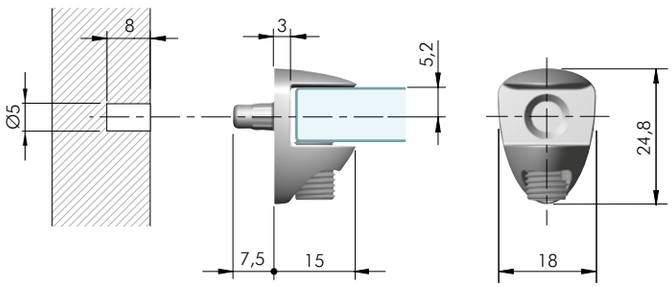



= Ø 5 mm +

= 8 - 10 mm = PZ2

ZA EPn = 2500 pcs.

16014040YA

COBRA FIXING ACCESSORIES

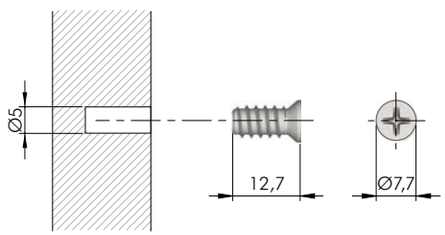



= Ø 5 mm +

= PZ2

ST = 5000 pcs.

60501050YA

2

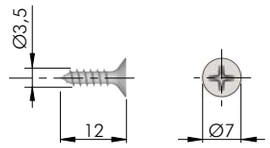



= Ø 3 mm

= PZ2

ST

= 10.000 pcs.

60101380ZN

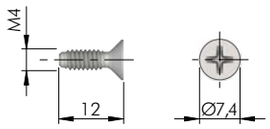



= M4 = PZ2

ST

= on request

60305040ZN

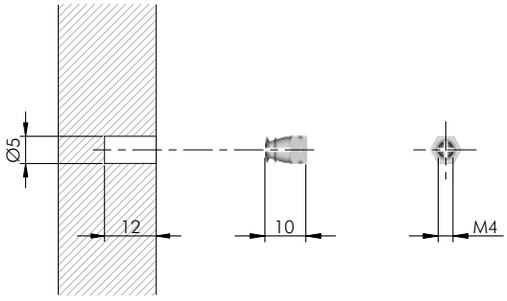



= Ø 5 mm = M4

BR

= 10.000 pcs.

20502021HL

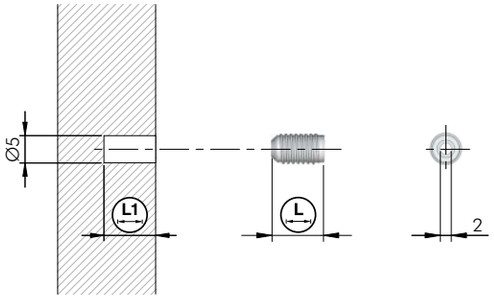



= Ø 5 mm

EPn

= 10.000 pcs.

	L	L1
20302020AA	9,5	11,5

PEKI



4 - 10 mm

Certificates available on request.

INSTALLATION

Assembling with smooth pin

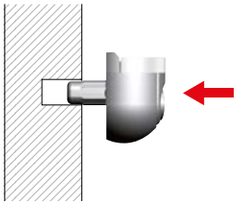



The coloured part is in clear soft rubber

Cross PZ2 screwdriver

SHELF INSTALLATION

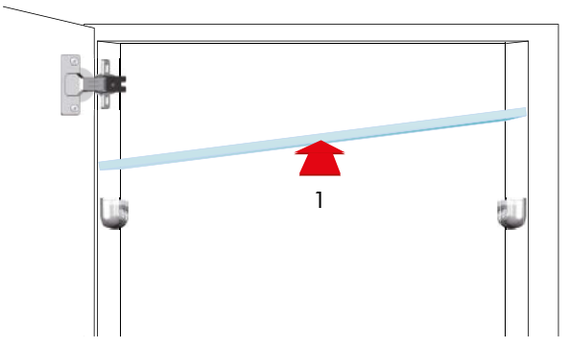

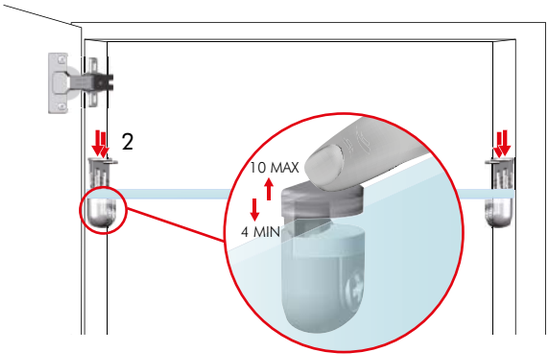

SHELF REMOVAL FOR NEW REPOSITIONING

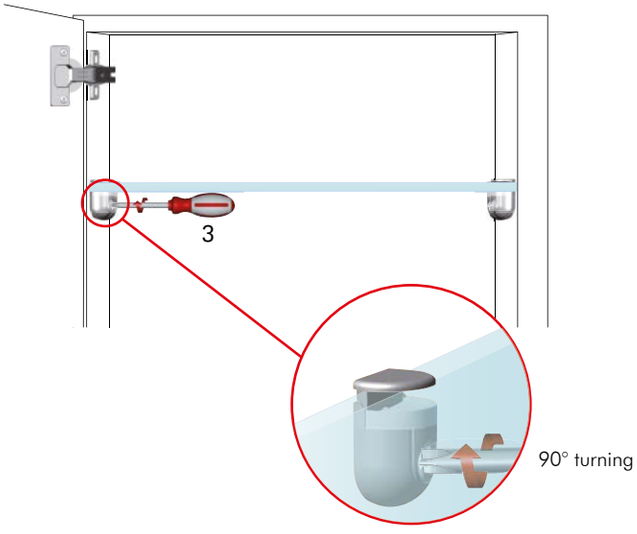

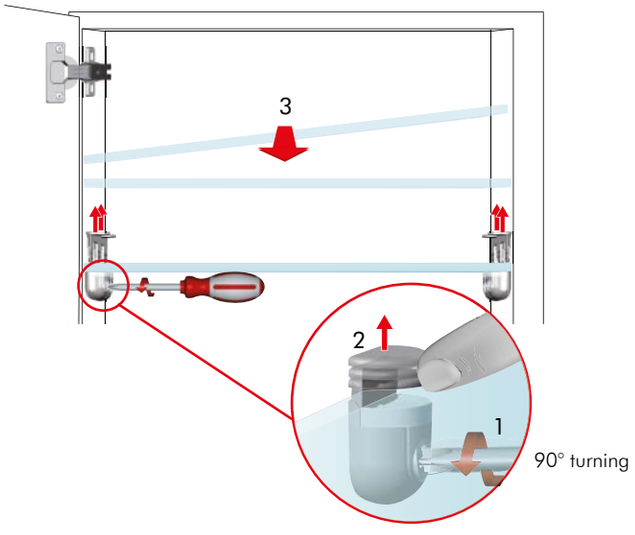

Back to table of contents

2

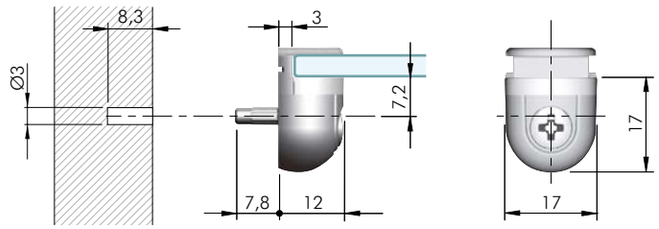



= Ø 3 mm +

= PZ2

ZA SRn = 1000 pcs.

16013010YA

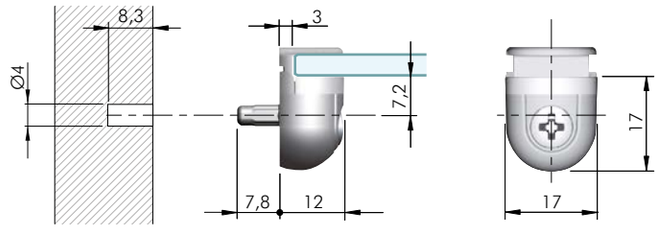



= Ø 4 mm +

= PZ2

ZA SRn = 1000 pcs.

16013020YA

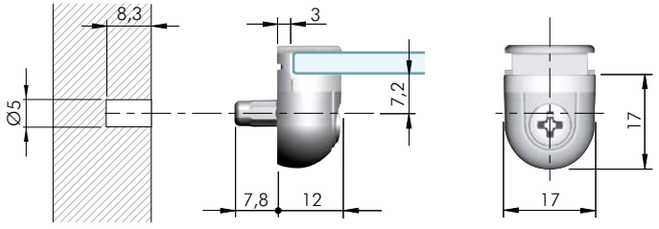



= Ø 5 mm +

= PZ2

ZA SRn = 1000 pcs.

16013040YA

KUBIC



4 - 15 mm

PAT. PENDING
Certificates available on request.

INSTALLATION

Assembling with smooth pin

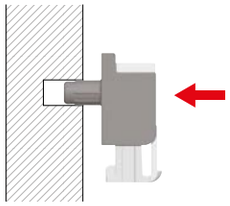

Assembling with alternative fixing options to achieve horizontal connection

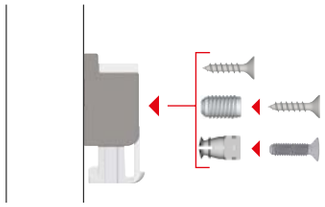



The coloured parts are in clear soft rubber

SHELF INSTALLATION

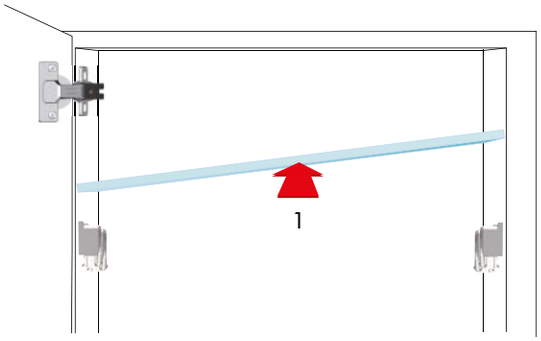

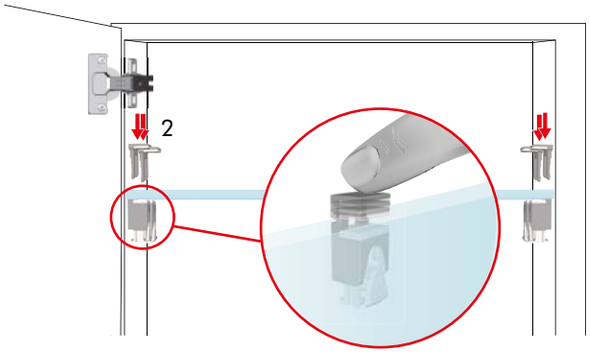

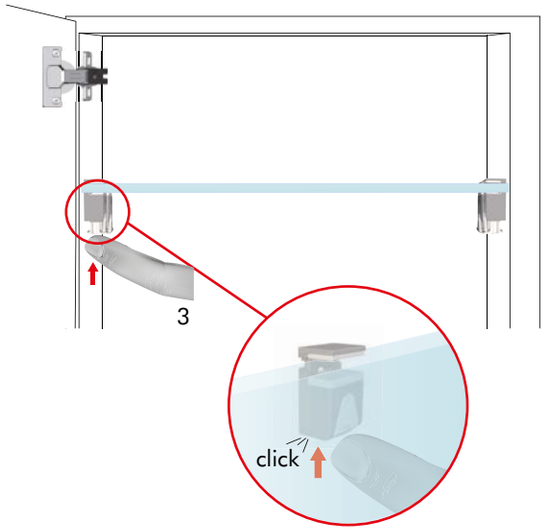

SHELF REMOVAL FOR NEW REPOSITIONING

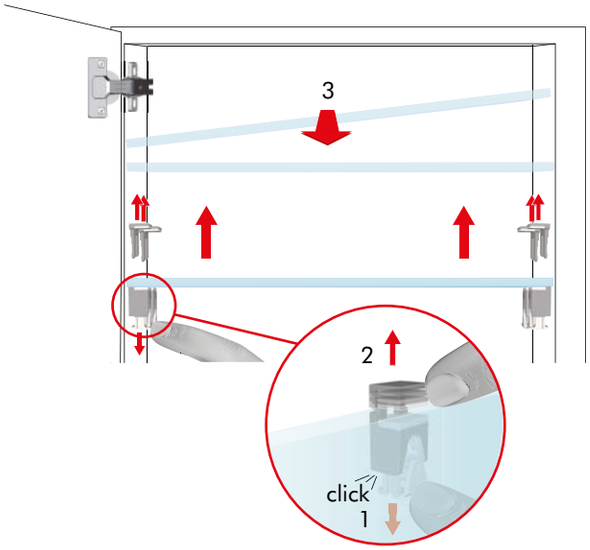

Back to table of contents

2

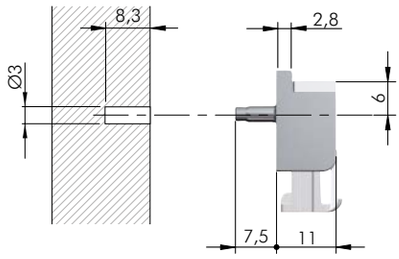



= Ø 3 mm

ZA SRn EP

= 2000 pcs.

16019010YA	EP
16019010YQ	EPg
16019011YA	EPa
	EPw

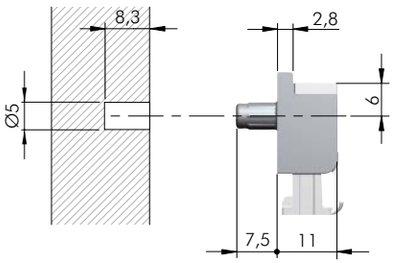



= Ø 5 mm

ZA SRn EP

= 2000 pcs.

16019020YA	EP
16019024YQ	EPg
16019021YA	EPa
	EPw

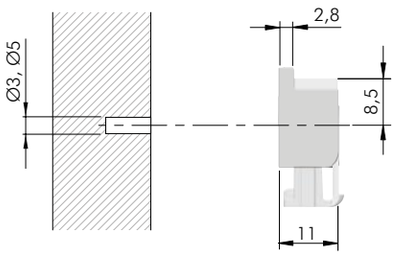



= Ø 3, Ø 5 mm

ZA SRn EP

= 2000 pcs.

16019030YA	EP
16019033YQ	EPg
16019031YA	EPa
	EPw

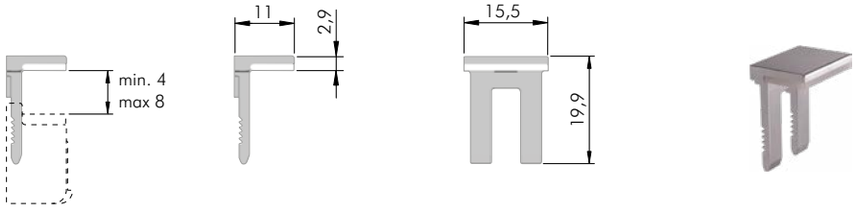

= 4 - 8 mm

ZA SRn

= 2000 pcs.

16019140YA | **YQ**



= 5 - 9 mm

ZA

= 2000 pcs.

16019130YA | **YQ**

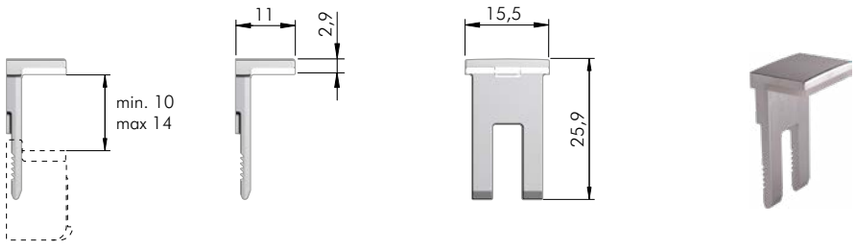

= 10 - 14 mm

ZA SRn

= 2000 pcs.

16019180YA

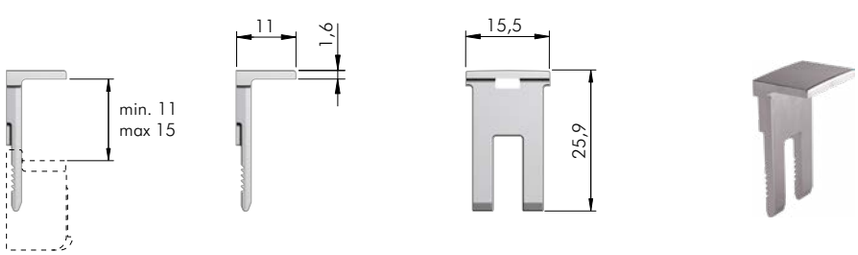

= 11 - 15 mm

ZA

= 1000 pcs.

16019170YA

KUBIC FIXING ACCESSORIES

2

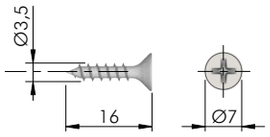



= Ø 3 mm

= PZ2

ST

=10.000 pcs.

60101390ZN

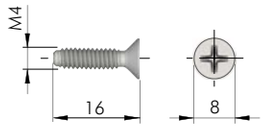



= M4 = PZ2

ST

= 5000 pcs.

60305060ZN

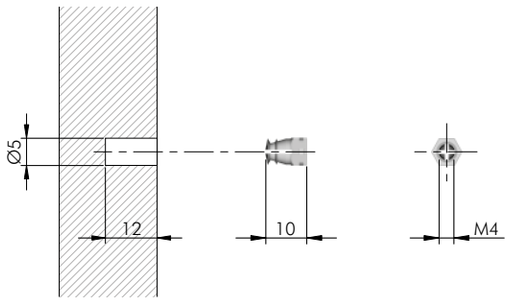



= Ø 5 mm = M4

BR

= 10.000 pcs.

20502021HL

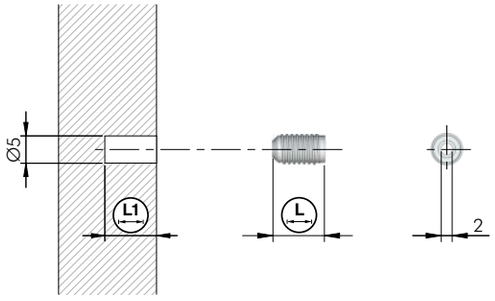



= Ø 5 mm

EPn

= 10.000 pcs.

20302020AA	9,5	11,5

PULL



5 - 15 mm

INSTALLATION

Assembling with alternative fixing options
to achieve horizontal connection

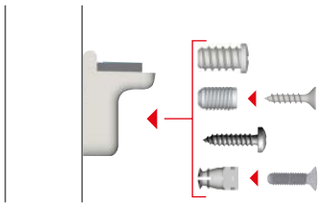



The coloured part is in black soft rubber

SHELF INSTALLATION

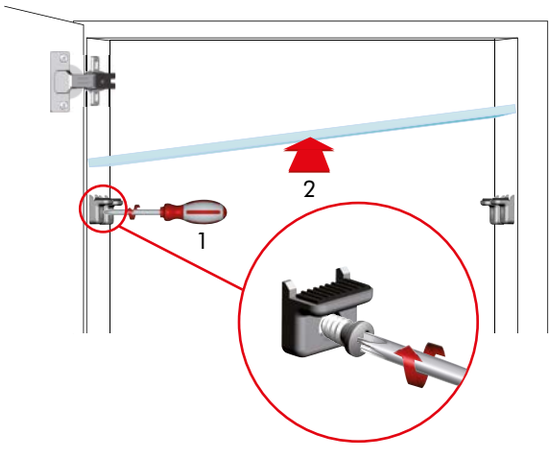

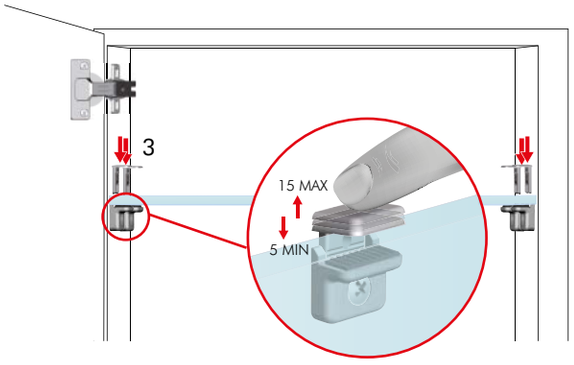

SHELF REMOVAL FOR NEW REPOSITIONING

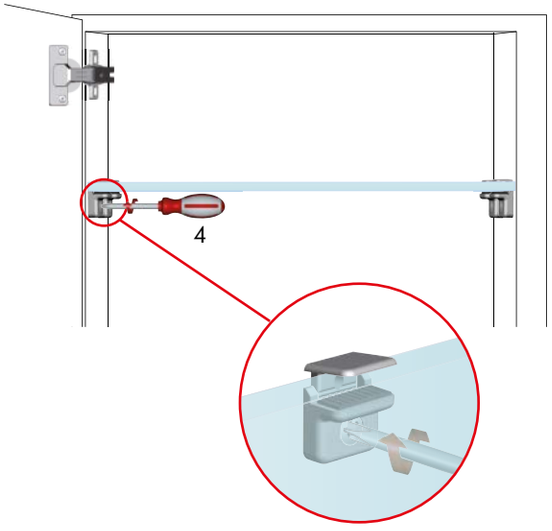

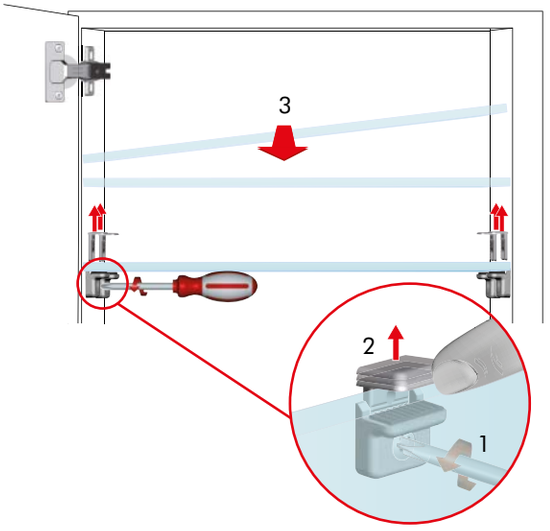

Back to table of contents

PULL

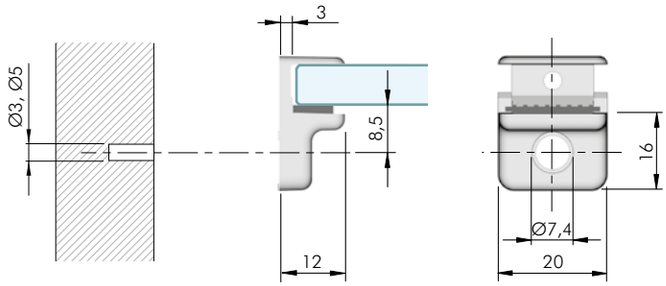



= Ø 3, Ø 5 mm

= 5 - 8 mm

ZA SRb

= 3000 pcs.

16012010YA

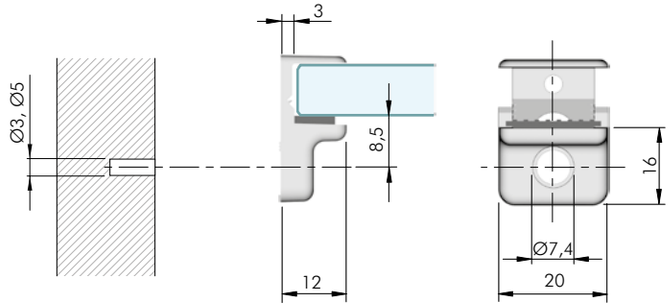



= Ø 3, Ø 5 mm

= 10 - 15 mm

ZA SRb

= 3000 pcs.

16012100YA

PULL FIXING ACCESSORIES

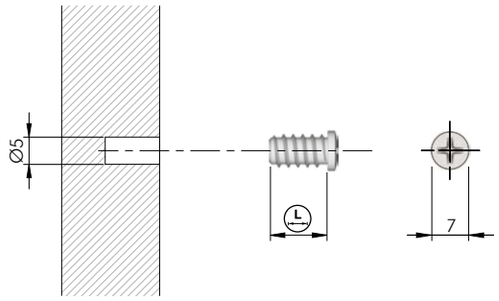



= Ø 5 mm

= PZ2

ST

= 5000 pcs.

60507010YA	10,5
60507020YA	15

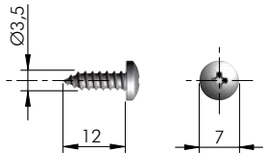



= Ø 3 mm

= PZ2

ST

= 15.000 pcs.

60103130YA

Back to table of contents

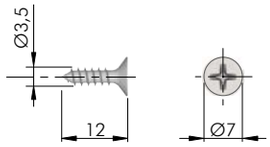



= Ø 3 mm

= PZ2

ST

=10.000 pcs.

60101380ZN

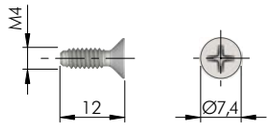



= M4 = PZ2

ST

= on request

60305040ZN

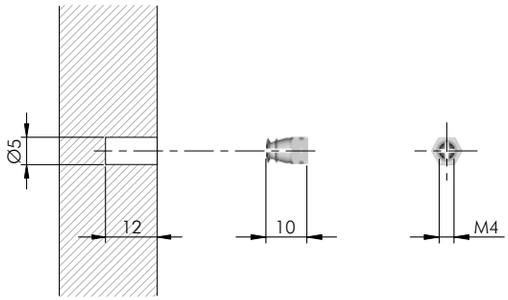



= Ø 5 mm = M4

BR

= 10.000 pcs.

20502021HL

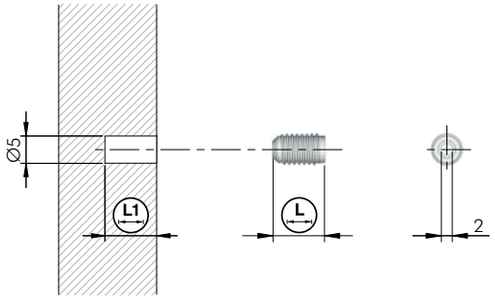



= Ø 5 mm

EPn

= 10.000 pcs.

20302020AA	9,5	11,5